## TRUSS LIABILITY EXCLUSION NOTE

**Quattrone and Associates, Inc. (QAI) did not prepare or design the truss plans attached to this file. The engineer of record on the truss plan is responsible for the truss engineering, reactions and uplifts. QAI is only referencing the truss plans for the purpose of designing the building structure.**
**The contractor / owner is responsible for reviewing the truss plan to determine the design, details, dimensions, and the accuracy of the truss plans in accordance with the building design.**
**QAI will not be liable for any errors in the truss design.**

| SHEET # | PLAN SCHEDULE |
|---|---|
| 1 OF 10 | EXTERIOR ELEVATIONS,ROOF PLANE PLAN, SECTIONS |
| 2 OF 10 | FOUNDATION PLAN,WALL SECTION , AND SECTIONS |
| 3 OF 10 | PLUMBING PLAN,PLUMBING ISOMETRICS |
| 4 OF 10 | PLUMBING DETAILS SHEET |
| 5 OF 10 | DIMENSIONAL FLOOR PLAN , SOFFIT DETAIL AND SECTIONS |
| 6 OF 10 | NOTED FLOOR PLAN,SCHEDULES, AND SECTIONS |
| 7 OF 10 | ELECTRICAL PLAN, ELECTRICAL SCHEDULE AND SECTIONS |
| 8 OF 10 | HVAC PLAN , PLAN NOTES |
| 9 OF 10 | ENGINEERING NOTES AND SECTIONS |
| 10 OF 10 | FLASHING DETAILS ,SECTIONS |
| SH-1 OF SH-1 | SHOP DRAWINGS |
| | TRUSS LAYOUT |

BLDMP24-000042

## DESIGN PARAMETERS:

APPLICABLE CODES:
BUILDING CODE = (8TH EDITION ) OF THE 2023 FLORIDA RESIDENTIAL BUILDING CODE,BUILDING 2023
MECHANICAL CODE = (8TH EDITION ) OF THE 2023 FLORIDA RESIDENTIAL BUILDING CODE, MECHANICAL 2023
PLUMBING CODE = (8TH EDITION) OF THE 2023 FLORIDA RESIDENTIAL BUILDING CODE, PLUMBING 2023

ELECTRICAL CODE = NEC 2020
FLORIDA FIRE PREVENTION CODE = 8TH EDITION
LIFE SAFETY CODE = NFPA 101 8TH EDITION

ACCESSIBILTY CODE = (8TH EDITION) OF THE 2023 FLORIDA RESIDENTIAL BUILDING CODE, BUILDING 2023
ENERGY CODE =(5TH EDITION) OF THE 2023 FLORIDA RESIDENTIAL BUILDING CODE, BUILDING 2023

METHOD OF DESIGN:
DESIGNED PURSUANT TO (8TH EDITION) OF THE 2023 FLORIDA RESIDENTIAL BUILDING CODE, BUILDING 2023 , CHAPTER 3 AND SECTION 1609 OF THE (8TH EDITION) OF THE 2023 FLORIDA BUILDING CODE

BASIC WIND SPEED:
- [ ] 170 MPH (ULIMATE DESIGN) = 132.0 MPH (NOMINAL DESIGN)
- [x] 160 MPH (UTIMATE DESIGN) = 124 MPH (NOMINAL DESIGN)
- [ ] 150 MPH (UTIMATE DESIGN) = 116 MPH (NOMINAL DESIGN)

IMPORTANCE FACTOR/COMPONENTS AND CLADDING:
- [ ] 0.77 (RISK CATEGORY I)
- [x] 1.00 (RISK CATEGORY II)
- [ ] 1.15 (RISK CATEGORY III)
- [ ] 1.15 (RISK CATEGORY IV)

BUILDING OCCUPANCY CLASSIFICATION:
- [ ] GROUP A - ASSEMBLY
- [ ] GROUP B - BUSINESS
- [ ] GROUP D - DAY CARE CENTER
- [ ] GROUP E - EDUCATIONAL
- [ ] GROUP F - FACTORY INDUSTRIAL
- [ ] GROUP H - HAZARDOUS
- [ ] GROUP I - INSTITUTIONAL
- [ ] GROUP M - MERCANTILE
- [x] GROUP R - RESIDENTIAL
- [ ] GROUP S - STORAGE

TORNADO BASIC WIND SPEED:
- [x] RISK CATEGORY II = N/A
- [ ] 170 MPH (NORMAL DESIGN F3-SECOND GUST)
- [ ] 160 MPH (NORMAL DESIGN F3-SECOND GUST)
- [ ] 150 MPH (NORMAL DESIGN F3-SECOND GUST)

RAIN FALL INFORMATION:
- [x] N/A SLOPED ROOF GREATER THAN 2/12
- [ ] RAINFALL DATA FROM FBC PLUMBING 2023 FIGURE 1106.1 IN./HR.
- [ ] ROOF AREA IN SF.

BUILDING CONSTRUCTION TYPE:
- [ ] TYPE I
- [ ] TYPE II
- [ ] TYPE III
- [ ] TYPE IV
- [x] TYPE V

EXPOSURE CATAGORY:
- [ ] A
- [ ] C
- [x] B
- [ ] D

WINDBORNE DEBRIS REGION:
- [ ] NO
- [x] YES
  - [ ] IMPACT RESISTANT GLAZING
  - [ ] IMPACT RESISTANT COVERING
  - [x] COMBINATION OF IMPACT RESISTANT GLAZING & COVERING

INTERNAL PRESSURE COEFFICIENTS:
- [ ] 0.00 (OPEN)
- [x] +0.18, -0.18 (ENCLOSED)
- [ ] +0.55, -0.55, (PARTIALLY ENCLOSED)

CLASSIFICATION OF WORK:
- [ ] ALTERATION
  - [ ] LEVEL 1
  - [ ] LEVEL 2
  - [ ] LEVEL 3
- [x] NEW CONSTRUCTION
- [ ] CHANGE OF OCCUPANCY
- [ ] ADDITION / REMODEL
- [ ] HISTORIC BUILDING

DESIGN LOAD BEARING
VALUE OF SOIL 2000 PSF

GENERAL NOTES

1. CONTRACTOR TO VERIFY ALL DIMENSIONS PRIOR TO START OF CONSTRUCTION DIMENSIONS TAKE PREEDENCE OVER SCALED DIMENSIONS.

2. MASONRY CONTRACTOR TO VERIFY MASONRY OPENING DIMENSIONS FOR ALL WINDOWS,SLIDING GLASS DOORS,& ENTRY DOORS,AS SHOWN ON THESE PLANS,WITH THE DOOR AND WINDOW MANUFACTURER PRIOR TO CONSTRUCTION.

3.IT IS THE CONTRACTORS RESPONSIBILITY TO CHECK THESE PLANS FOR DIMENSIONAL ERRORS,AND/OR OMISSIONS PRIOR TO CONSTRUCTION.IF ANY ERRORS OR OMISSIONS EXIST IN THE DRAWINGS OR SPECIFICATIONS,THE CONTRACTOR SHALL NOTIFY HICKS DRAFTING & DESIGN,IN WRITING WITHIN 10 DAYS OF RECIEPT OF PLANS,AND PRIOR TO ANY CONSTRUCTION,OR CONTRACTOR ASSUMES ALL THE RESPONSIBILITY FOR THE RESULTS AND ALL THE COSTS OF RECTIFYING THE SAME.

4.HICKS DRAFTING & DESIGN DOES NOT ASSUME ANY RESPONSIBILITY FOR SUPERVISION OF CONSTRUCTION. CONTRACTOR TO ADHERE STRICTLY TO THE (8TH EDITION) OF THE 2023 FLORIDA RESIDENTIAL BUILDING CODE, CHAPTER 3 , AND SECTION 1609 OF THE (8TH EDITION) OF THE 2023 FLORIDA BUILDING CODE. TOGETHER WITH LOCAL AMENDMENTS, AND ALL OTHER APPLICABLE STATE, COUNTY, AND LOCAL STATUES,ORDININANCES, REGULATIONS, AND RULES.

PLAN REVISION NOTES 10-05-2024:

1.PROVIDED DESIGN PRESSURES FOR ROOF PRODUCTS REFER TO PRODUCT APPROVAL SHEET LOCATED ON SHEET 8 OF 10

2.REVISED DESIGN PRESSURES FOR KAYCAN SOFFITS. REFER TO PRODUCT APPROVAL SHEET LOCATED ON SHEET 8 OF 10

3. SEE ATTACHED SIGNED ENERGY DISPLAY CARD

4.ONLY ONE OUTLET REQUIRED IN GARAGE. ONE BAY GARAGE REFER TO SHEET ELECTRICAL PLAN LOCATED ON SHEET 7 OF 10

5.LAUNDRY ROOM ADDED GFCI OUTLET. REFER TO ELECTRICAL PLAN LOCATED ON SHEET 7 OF 10

6.WIRING METHOD NOTE ADDED ON SHEET 7 OF 10

7.GROUNDING ELECTRODE ADDED ON ELECTRICAL PLAN REFER TO GARAGE AREA ON SHEET 7 OF 10

8.IDENTIFY RECEPT AND LIGHTS WITH CKT NUMBERS ON ELECTRICAL PLAN LOCATED ON SHEET 7 OF 10

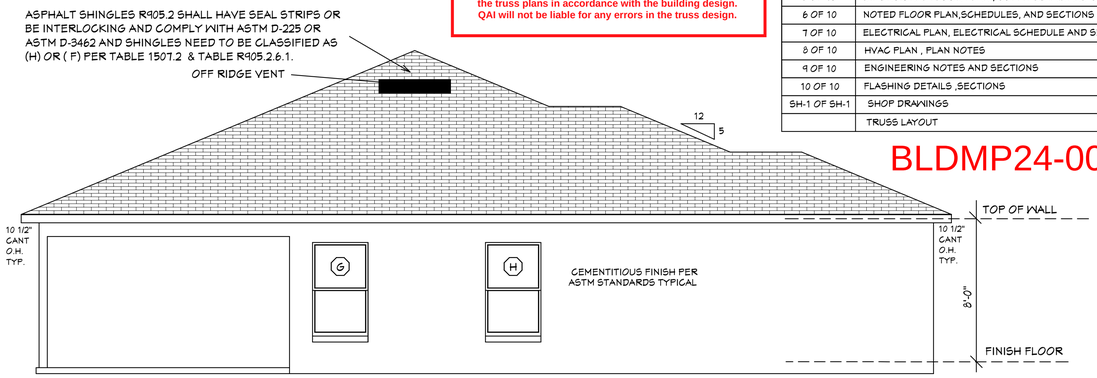


LEFT SIDE ELEVATION

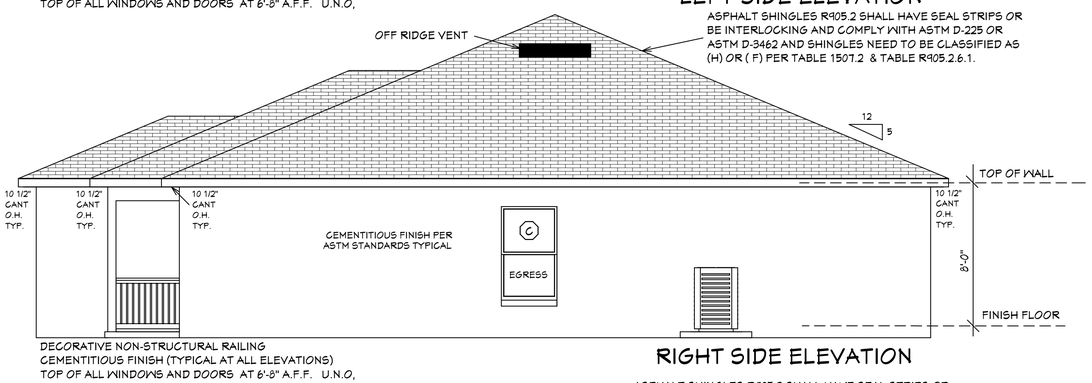


RIGHT SIDE ELEVATION

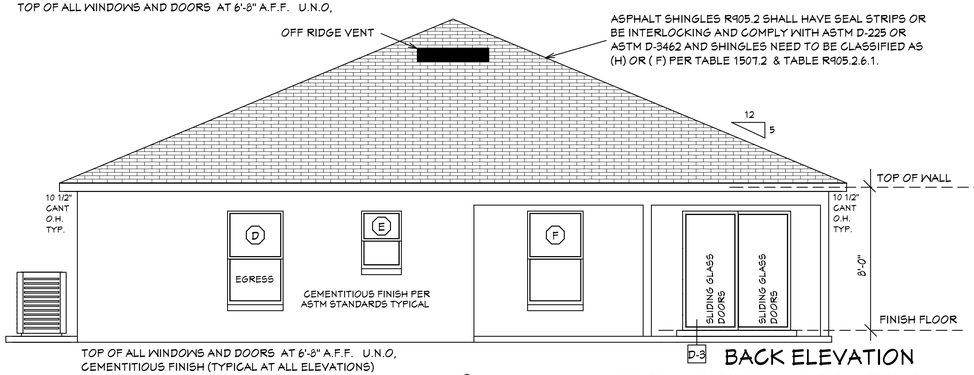


BACK ELEVATION

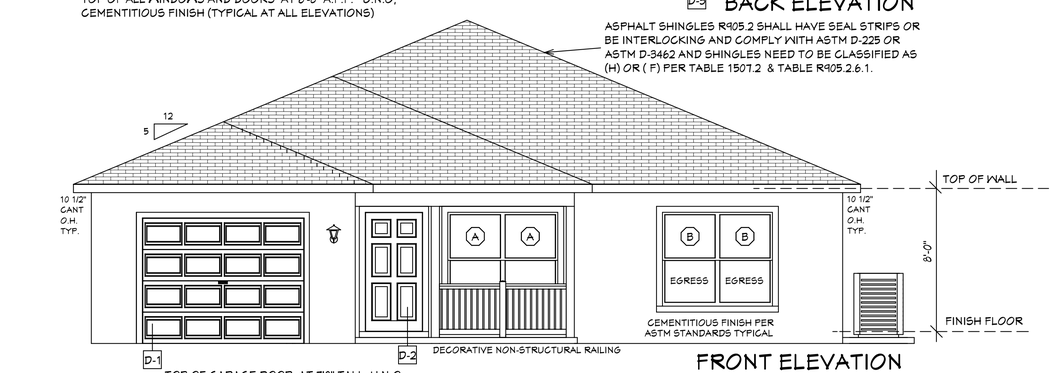


FRONT ELEVATION

EXTERIOR ELEVATIONS

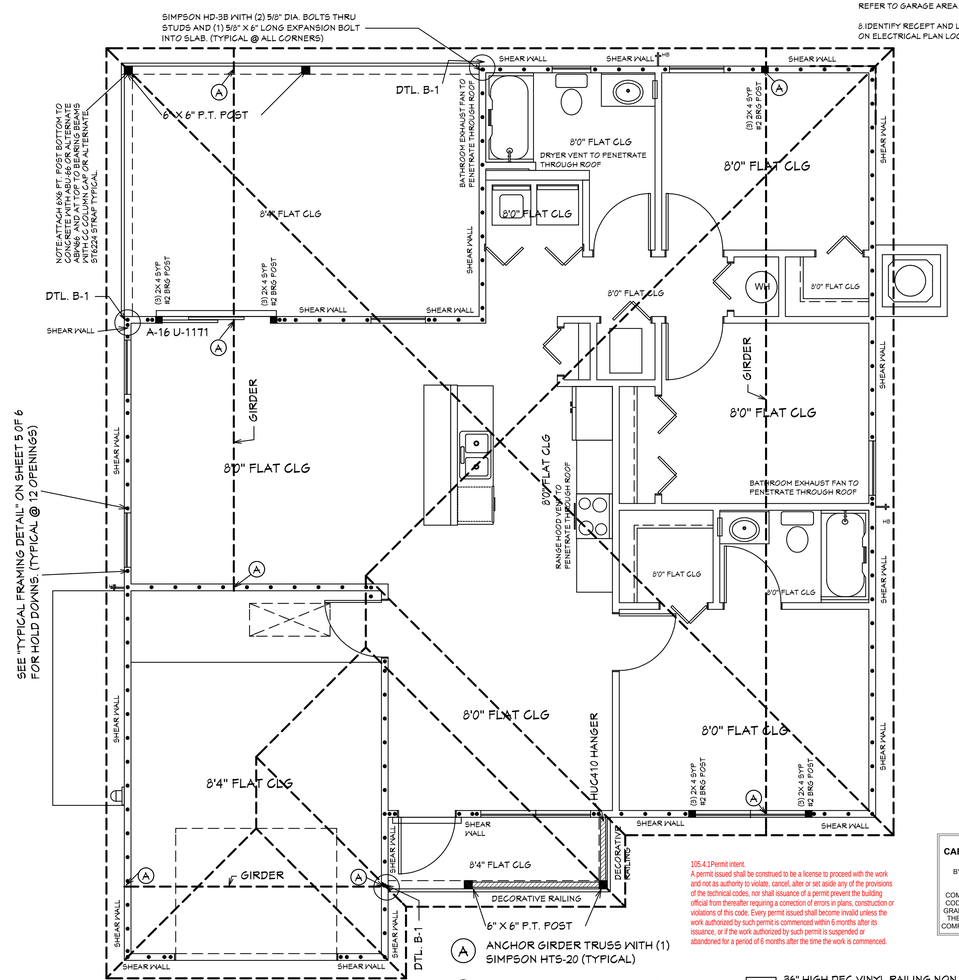


NOTE: ALL EXTERIOR WALLS ARE 3 1/2" WIDE WOOD WALLS WITH 15/32" PLYWOOD EXTERIOR AND 1/2" DRYWALL INSIDE (4 1/2" TOTAL.) UNLESS NOTED DIFFERENT.
NOTE: ALL INTERIOR WALLS ARE 4 1/2" AND 6 1/2" WIDE WOOD WALLS. UNLESS NOTED DIFFERENT.
CONTRACTOR IS RESPONSIBLE FOR VERIFYING ROUGH OPENINGS AND SIZES OF ALL DOORS AND WINDOWS BEFORE STARTING CONSTRUCTION.

(A) ANCHOR GIRDER TRUSS WITH (1) SIMPSON HTS-20 (TYPICAL)
(B) ANCHOR GIRDER TRUSS WITH (2) SIMPSON HTS-20 (TYPICAL)

NOTE:ATTACH 6X6 PT. POST BOTTOM TO CONCRETE WITH ABU-66 OR ALTERNATE ABW66 AND AT TOP TO BEARING BEAMS WITH CC COLUMN CAP OR ALTERNATE ST6224 STRAP TYPICAL.

ROOF PLANE PLAN

105.4 Permit intent.
A permit issued shall be construed to be a license to proceed with the work and not as authority to violate, cancel, alter or set aside any of the provisions of the technical codes, nor shall issuance of a permit prevent the building official from thereafter requiring a correction of errors in plans, construction or violations of this code. Every permit issued shall become invalid unless the work authorized by such permit is commenced within 6 months after its issuance, or if the work authorized by such permit is suspended or abandoned for a period of 6 months after the time the work is commenced.

**MASTERED PLAN**
**CAPE CORAL BUILDING DIVISION**
BY: MK__ DATE: 11/07/2024
ALL CONSTRUCTION SHALL BE IN COMPLIANCE WITH THE FLORIDA BUILDING CODE, ALL STATE AND LOCAL CODES. THE GRANTING OF A PERMIT DOES NOT RELIEVE THE CONTRACTOR OF RESPONSIBILITY TO COMPLY WITH ALL CODES AND ORDINANCES.

RL-1 36" HIGH DEC VINYL RAILING NON GUARDRAIL. OPENING WILL RESIST 4" SPHERE. ATTACH PER MANUFACTURES SPECIFICATIONS.

5/12 PITCH ROOF
2X4 TOP CHORD
10 1/2" CANT PLUMB OVERHANG
TRUSS BEARING AT 8'0" ELEV. A.F.F. TYPICAL
160 MPH WIND LOAD
40 LBS LOADING/ASPHALT SHINGLES


Alfred Quattrone
Digitally signed by Alfred Quattrone
Date: 2024-10-07 16:50:18
Al Quattrone, Professional Engineer, State of Florida, License No. 52741
This item has been digitally signed and sealed by Al Quattrone, PE, on 10/7/2024.
Printed copies of this document are not considered signed and sealed and the signature must be verified on any electronic copies.
10-05-2024

Quattrone & Associates, Inc.
Engineers, Planners, & Development Consultants
4301 Veronica Shoemaker Blvd. Fort Myers, FL 33916 (239) 936-5222 QAI@cox.net
Certificate of Authorization Number: 8465
AL QUATTRONE P.E. # 52741


COMPLIANCE STATEMENT
THESE PLANS HAVE BEEN DESIGNED BY A REGISTERED PROFESSIONAL ENGINEER AND THE DESIGN PARAMETERS FOR THE (8TH EDITION) OF TH 2023 FLORIDA RESIDENTIAL BUILDING CODE. CHAPTER 3 IN GENERAL AN SECTION 1609 OF THE (8TH EDITION) OF THE 2023 FLORIDA BUILDING CODE.

| REVISIONS: |
|---|
| 08-08-2024 |
| 10-05-2024 |

MASTER PLAN
I AL QUATTRONE APPROVE OF REPETITIVE USE OF PLANS FOR PERMITTING
CAPE PALM 1 3/2/1 MODEL / LEFT HAND GARAGE / MONO FOOTER / 2023 CODE / 10 1/2" CANT

10-05-2024 REVISIONS


HICKS DRAFTING & DESIGN
4216 5TH STREET W
LEHIGH ACRES,FL. 33971
CELL:(239)462 -2734
E-MAIL:DHICKS928@AOL.COM


BUILDER: HABITAT FOR HUMANITY
3 BEDROOM 2 BATH HOME /160 MPH WIND LOADING
NEW HOUSE FOR:
LOT- /BLOCK- /UNIT- /SECTION-
TOWNSHIP- SOUTH/RANGE- EAST
STRAP#
ADDRESS:
ADDRESS:

DRAWN BY
DAVID HICKS

DATE: 03-29-2021

SCALE:1/4"=1'0"

JOB # 2024-048

SHEET
1 OF 10 SHEET

BLDMP24-000042

TABLE R803.2.3.1
ROOF SHEATHING ATTACHMENTa, b

| Rafter/Truss Spacing24 in. o.c. | WIND SPEED | | | | | | | | | | | | | | | |
|---|---|---|---|---|---|---|---|---|---|---|---|---|---|---|---|---|
| | 115 mph | | 120 mph | | 130 mph | | 140 mph | | 150 mph | | 160 mph | | 170 mph | | 180 mph | |
| | E | F | E | F | E | F | E | F | E | F | E | F | E | F | E | F |
| Exposure B | | | | | | | | | | | | | | | | |
| Rafter/Truss SG = 0.42 | 6 | 6 | 6 | 6 | 6 | 6 | 6 | 6 | 6 | 6 | 4 | 4 | 4 | 4 | 4 | 4 |
| Rafter/Truss SG = 0.49 | 6 | 12 | 6 | 12 | 6 | 6 | 6 | 6 | 6 | 6 | 6 | 6 | 6 | 6 | 6 | 6 |
| Exposure C | | | | | | | | | | | | | | | | |
| Rafter/Truss SG = 0.42 | 6 | 6 | 6 | 6 | 6 | 6 | 4 | 4 | 4 | 4 | 4 | 4 | 3 | 3 | 3 | 3 |
| Rafter/Truss SG = 0.49 | 6 | 6 | 6 | 6 | 6 | 6 | 6 | 6 | 6 | 6 | 6 | 6 | 4 | 4 | 4 | 4 |
| Exposure D | | | | | | | | | | | | | | | | |
| Rafter/Truss SG = 0.42 | 6 | 6 | 6 | 6 | 4 | 4 | 4 | 4 | 4 | 4 | 3 | 3 | 3 | 3 | 3 | 3 |
| Rafter/Truss SG = 0.49 | 6 | 6 | 6 | 6 | 6 | 6 | 6 | 6 | 4 | 4 | 4 | 4 | 4 | 4 | 4 | 4 |

E = Nail spacing along panel edges (inches)
F = Nail spacing along intermediate supports in the panel field (inches)
a. For sheathing located a minimum of 4 feet from the perimeter edge of the roof, including 4 feet on each side of ridges and hips, nail spacing is permitted to be 6 inches on center along panel edges and 6 inches on center along intermediate supports in the panel field.
b. Where rafter/truss spacing is less than 24 inches on center, roof sheathing fastening is permitted to be in accordance with the AWC WFCM or the AWC NDS.

R803.2.2Allowable spans.
The minimum thickness and span rating for wood structural panel roof sheathing shall not exceed the values set forth in Table R803.2.2.
TABLE R803.2.2
MINIMUM ROOF SHEATHING THICKNESS

| Rafter/Truss Spacing24 in. o.c. | WIND SPEED | | | | | | | |
|---|---|---|---|---|---|---|---|---|
| | 115 mph | 120 mph | 130 mph | 140 mph | 150 mph | 160 mph | 170 mph | 180 mph |
| Minimum Sheathing Thickness, inches(Panel Span Rating) Exposure B | 7/16(24/16) | 7/16(24/16) | 7/16(24/16) | 7/16(24/16) | 15/32(32/16) | 19/32(40/20) | 19/32(40/20) | 19/32(40/20) |
| Minimum Sheathing Thickness, inches(Panel Span Rating) Exposure C | 7/16(24/16) | 7/16(24/16) | 15/32(32/16) | 19/32(40/20) | 19/32(40/20) | 19/32(40/20) | 19/32(40/20) | 23/32(48/24) |
| Minimum Sheathing Thickness, inches(Panel Span Rating) Exposure D | 15/32(32/16) | 19/32(40/20) | 19/32(40/20) | 19/32(40/20) | 19/32(40/20) | 19/32(40/20) | 23/32(48/24) | 23/32(48/24) |

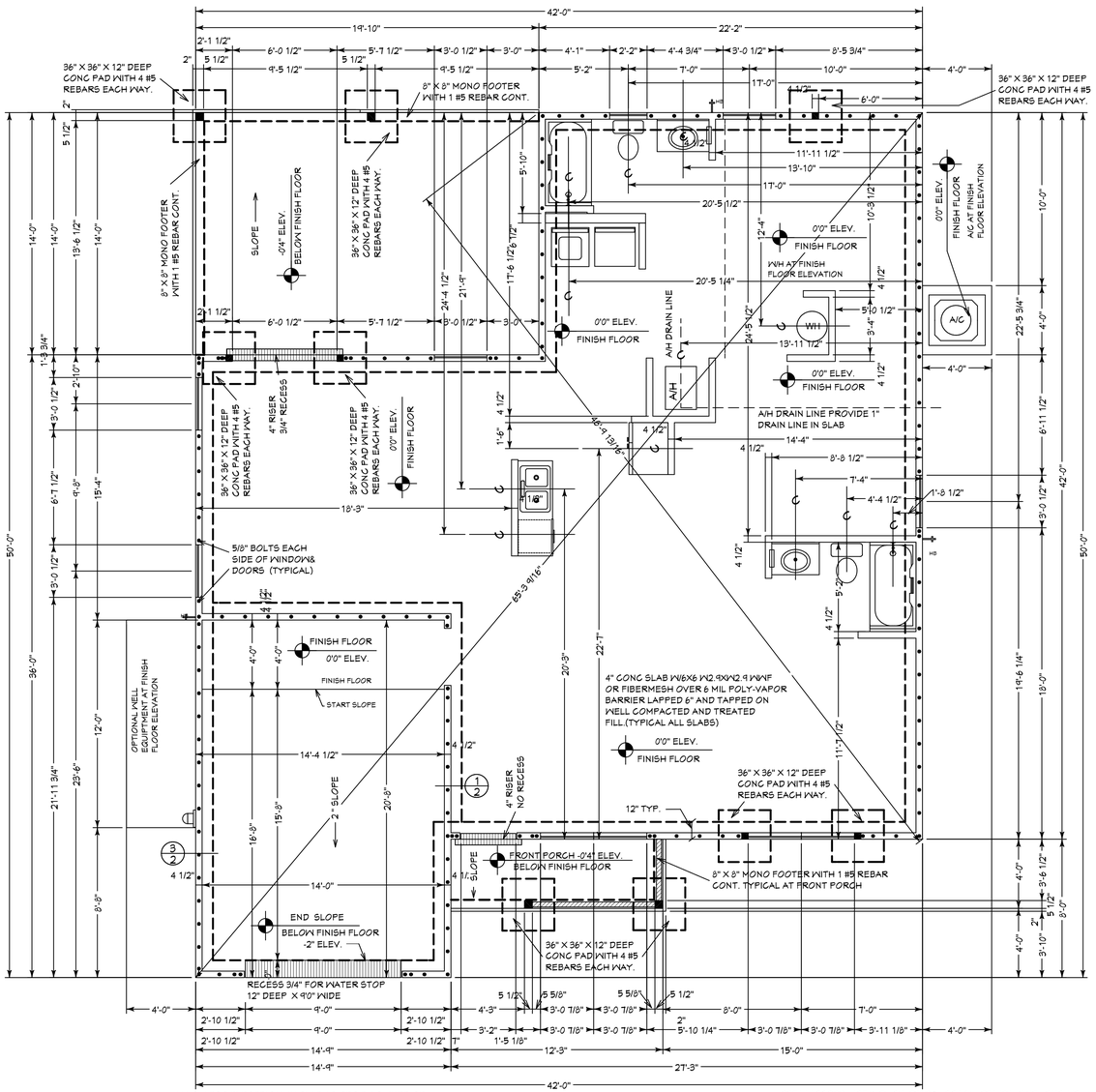


ALLOW FOR ELECTRICAL IN SLAB AS REQ BY OWNER OR BUILDER.ELECTRICAL CONTRACTOR TO VERIFY NEEDS WITH CONTRACTOR PRIOR TO START OF CONSTRUCTION.

CONTRACTOR IS RESPONSIBLE FOR VERIFYING ROUGH OPENING AND SIZES OF ALL DOORS AND WINDOWS BEFORE STARTING CONSTRUCTION

PROVIDE 1" PVC DRAIN LINE FOR AIR HANDLER

NOTE: ALL EXTERIOR WALLS ARE 3 1/2" WIDE WOOD WALL WITH 15/32" PLYWOOD AND 1/2" DRYWALL (4 1/2" TOTAL) UNLESS NOTED DIFFERENT.

NOTE: ALL INTERIOR WALLS ARE 3 1/2" AND 5 1/2" WIDE WOOD WALLS WITH 1/2" DRYWALL EACH SIDE ( 4 1/2" & 6 1/2" TOTAL) UNLESS NOTED DIFFERENT.

NOTE:IN ACCORDANCE WITH CHAPTER 7 ASCE-24 ATTENDANT UTILITIES A/C AND W/H AND ALL OTHER EQUIPMENT SHALL BE LOCATED AT FINISH FLOOR ELEVATION OR ABOVE THE MINIMUM FLOOD ELEVATION BFE +1 FOOT OF FREEBOARD,WITH THE EXCEPTION OF RISERS OR UNDERGROUND LINES. IT IS ACCEPTABLE FOR THE LOCATION OF A/C AND WELL EQUIPMENT AND OTHER UTILITY PAD LOCATIONS TO BE MOVED AS REQUIRED TO A DIFFERENT LOCATION OR DELETED IF NOT REQUIRED. REFER TO SITE PLAN FOR ACTUAL LOCATIONS OF UTILITY PADS.

# FOUNDATION PLAN

UNDERLAYMENT MUST MEETS REQUIREMENTS OF R905.1.1.1

Option #1 a self-adhering polymer-modified bitumen underlayment complying with ASTM D1970 applied over the entire roof.

Option #2 a minimum 4-inch wide strip of self-adhering polymer-modified bitumen complying with ASTM D1970 or a minimum 3 ¾ - inch wide strip of self-adhering flexible flashing tape complying with AAMA T11, applied over all joints in the roof decking. A felt underlayment complying with ASTM D226 Type II, ASTM D4869 Type III or IV, or ASTM D6757, or a synthetic underlayment meeting the performance requirements specified, is required to be applied over the strips/tape over the entire roof. (See Table 1507.1.1.1 of the FBCB or Table R905.1.1.1 of the FBCR for fastener type and spacing).

Option #3 three layers of felt underlayment comply ASTM D226 Type II or ASTM D4869 Type III or IV, or three layers of a synthetic underlayment meeting the performance requirements specified

where felt underlayment is used, it must be 30# or equivalent (ASTM D 226 Type II, ASTM D4869 Types III or IV)

R905.2 ASPHALT SHINGLES SHALL HAVE SELF SEAL STRIPS OR BE INTERLOCKING AND COMPLY WITH ASTM D-225 OR ASTM D-3462 AND SHINGLES NEED TO BE CLASSIFIED AS (H) OR (F) TABLE 1507.2 & TABLE R905.2.6.1

OVER 30# FELT ( UNDERLAYMENT MEETS REQUIREMENTS OF R905.1.1.1) OVER 19/32" PLYWOOD SHEATHING OR 19/32" OSB 40/20 RATED SHEATHING WITH 10d RING SHANK NAILS R803.2.3.1 AT 4" O.C. AT EDGES AND 4" O.C. AT INTERMEDIATE SUPPORT

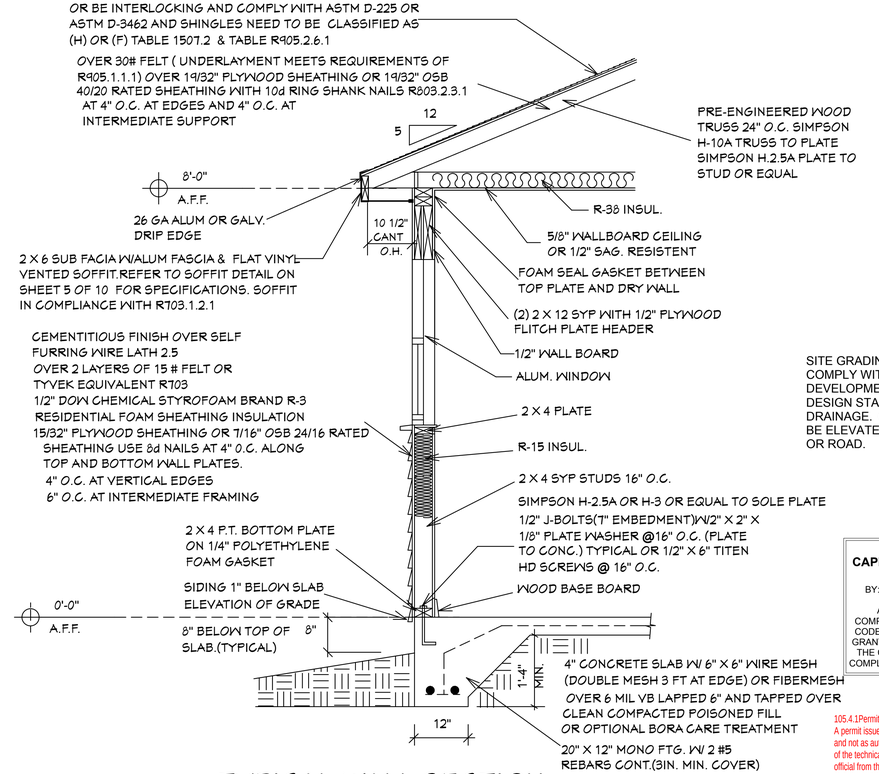


# TYPICAL WALL SECTION

3/4" = 1'-0"

GENERAL NOTES
1. CONTRACTOR TO VERIFY ALL DIMENSIONS PRIOR TO START OF CONSTRUCTION.DIMENSIONS TAKE PRECEDENCE OVER SCALED DIMENSIONS.

2. MASONRY CONTRACTOR TO VERIFY MASONRY OPENING DIMENSIONS FOR ALL WINDOWS,SLIDING GLASS DOORS,& ENTRY DOORS,AS SHOWN ON THESE PLANS,WITH THE DOOR AND WINDOW MANUFACTURER PRIOR TO CONSTRUCTION.

3.IT IS THE CONTRACTORS RESPONSIBILITY TO CHECK THESE PLANS FOR DIMENSIONAL ERRORS,AND/OR OMISSIONS PRIOR TO CONSTRUCTION.IF ANY ERRORS OR OMISSIONS EXIST IN THE DRAWINGS OR SPECIFICATIONS,THE CONTRACTOR SHALL NOTIFY HICKS DRAFTING & DESIGN,IN WRITING,WITHIN 10 DAYS OF REGIEPT OF PLANS,AND PRIOR TO ANY CONSTRUCTION,OR CONTRACTOR ASSUMES ALL THE RESPONSIBILITY FOR THE RESULTS AND ALL THE COSTS OF RECTIFYING THE SAME.

4.HICKS DRAFTING & DESIGN DOES NOT ASSUME ANY RESPONSIBILITY FOR SUPERVISION OF CONSTRUCTION. CONTRACTOR TO ADHERE STRICTLY TO THE (8TH EDITION) OF THE 2023 FLORIDA RESIDENTIAL BUILDING CODE. CHAPTER 3 , AND SECTION 1609 OF THE (8TH EDITION) OF THE 2023 FLORIDA BUILDING CODE. TOGETHER WITH LOCAL AMENDMENTS, AND ALL OTHER APPLICABLE STATE, COUNTY, AND LOCAL STATUES,ORDINNANCES, REGULATIONS, AND RULES.

NOTE:MASTER PLANS
FEMA/FLOOD ZONES CONSTRUCTION
NEW CONSTRUCTION OF ANY RESIDENTIAL STRUCTURE SHALL HAVE THE LOWEST FLOOR OR CONCRETE SLAB , INCLUDING GARAGE OR BASEMENT AND A/C W/H AND ALL EQUIPMENT, ELEVATED TO FINISH FLOOR ELEV. OR ABOVE THE BASE FLOOD ELEVATION PLUS 1 FOOT. THIS SHALL APPLY TO HOUSES OR MANUFACTURED HOMES THAT ARE TO BE PLACED OR SUBSTANIALLY IMPROVED ON SITES IN A NEW MANUFACTURED HOME PARK OR SUBDIVISION.LCD CHAPTER 6 ,ARTICLE IV FLOOD HAZARD REDUCTION.

THIS RESIDENCE MAY NOT BE BUILT WITHIN 6'0" OF ANOTHER STRUCTURE OR 5'0" FROM ANY PROPERTY LINE PER SECTION R302.1(1) (INCLUDING OVERHANGS)

SITE GRADING & DRAINAGE SHALL COMPLY WITH CITY ORDINANCE AND LAND DEVELOPMENT CODE, ENGINEERING DESIGN STANDARS SECTION L STORM DRAINAGE. GARAGE FLOOR SLAB SHALL BE ELEVATED TO 12" MIN. ABOVE CROWN OR ROAD.

**MASTERED PLAN**
**CAPE CORAL BUILDING DIVISION**
BY: MK_ DATE: 11/07/2024
ALL CONSTRUCTION SHALL BE IN COMPLIANCE WITH THE FLORIDA BUILDING CODE, ALL STATE AND LOCAL CODES. THE GRANTING OF A PERMIT DOES NOT RELIEVE THE CONTRACTOR OF RESPONSIBILITY TO COMPLY WITH ALL CODES AND ORDINANCES.

105.4.1Permit intent.
A permit issued shall be construed to be a license to proceed with the work and not as authority to violate, cancel, alter or set aside any of the provisions of the technical codes, nor shall issuance of a permit prevent the building official from thereafter requiring a correction of errors in plans, construction or violations of this code. Every permit issued shall become invalid unless the work authorized by such permit is commenced within 6 months after its issuance, or if the work authorized by such permit is suspended or abandoned for a period of 6 months after the time the work is commenced.


Alfred Quattrone
Digitally Signed by Alfred Quattrone
Date: 2024-10-07 16:50:05
Al Quattrone, Professional Engineer, State of Florida, License No. 52741
This item has been digitally signed and sealed by Al Quattrone, PE, on 10/7/2024.
Printed copies of this document are not considered signed and sealed and the signature must be verified on any electronic copies.
10-05-2024

Quattrone & Associates, Inc.
Engineers, Planners, & Development Consultants
4301 Veronica Shoemaker Blvd. Fort Myers, FL 33916 (239) 936-5222 QAI@cox.net
Certificate of Authorization Number: 9465
AL QUATTRONE P.E. # 52741


COMPLIANCE STATEMENT
THESE PLANS HAVE BEEN DESIGNED BY A REGISTERED PROFESSIONAL ENGINEER AND THE DESIGN PARAMETERS FOR THE (8TH EDITION) OF TH 2023 FLORIDA RESIDENTIAL BUILDING CODE. CHAPTER 3 IN GENERAL AN SECTION 1609 OF THE (8TH EDITION) OF THE 2023 FLORIDA BUILDING CODE.

REVISIONS:
08-08-2024
10-05-2024

CAPE PALM 1 3/2/1 MODEL / LEFT HAND GARAGE / MONO FOOTER / 2023 CODE / 10 1/2" CANT


HICKS DRAFTING & DESIGN
4216 5TH STREET W
LEHIGH ACRES,FL. 33971
CELL:(239)462 -2734
E-MAIL:DHICKS928@AOL.COM


BUILDER: HABITAT FOR HUMANITY
3 BEDROOM 2 BATH HOME /160 MPH WIND LOADING
NEW HOUSE FOR:
LOT- /BLOCK- /UNIT- /SECTION-
TOWNSHIP- SOUTH/RANGE- EAST
STRAP#
ADDRESS:
ADDRESS:

10-05-2024 REVISIONS

DRAWN BY
DAVID HICKS
DATE: 03-29-2021
SCALE:1/4"=1'0"
JOB # 2024-048
SHEET
2 OF 10 SHEET

BLDMP24-000042

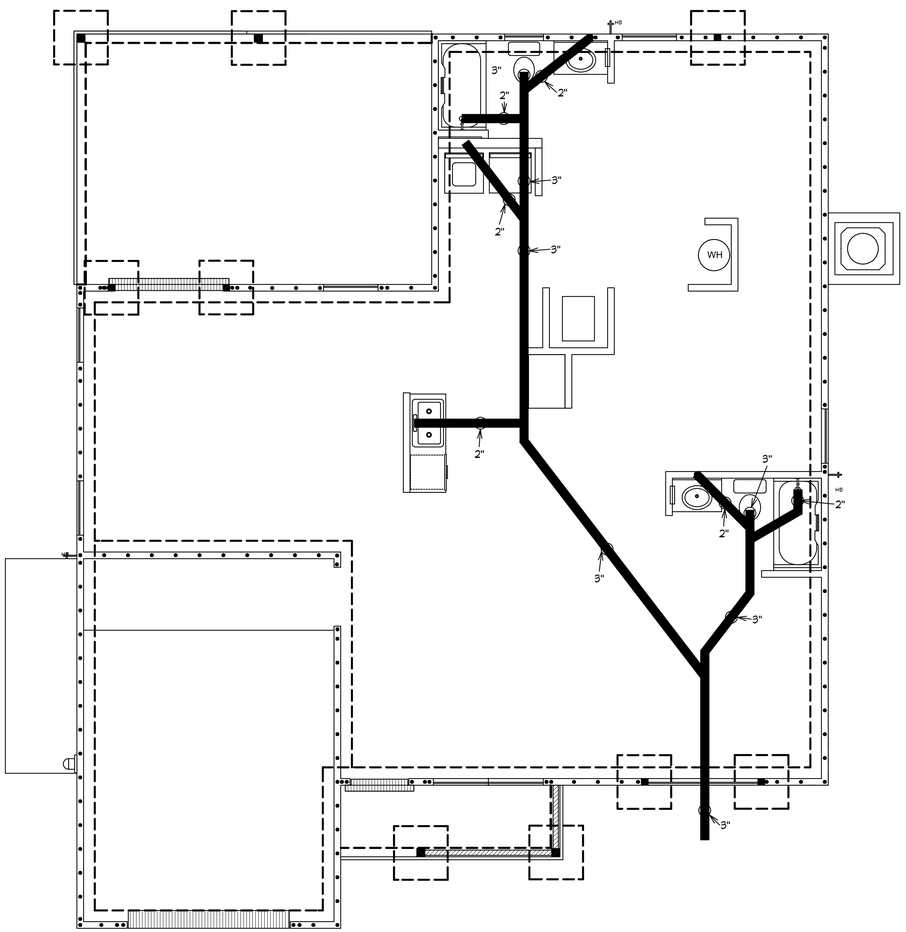


PLUMBING FLOOR PLAN

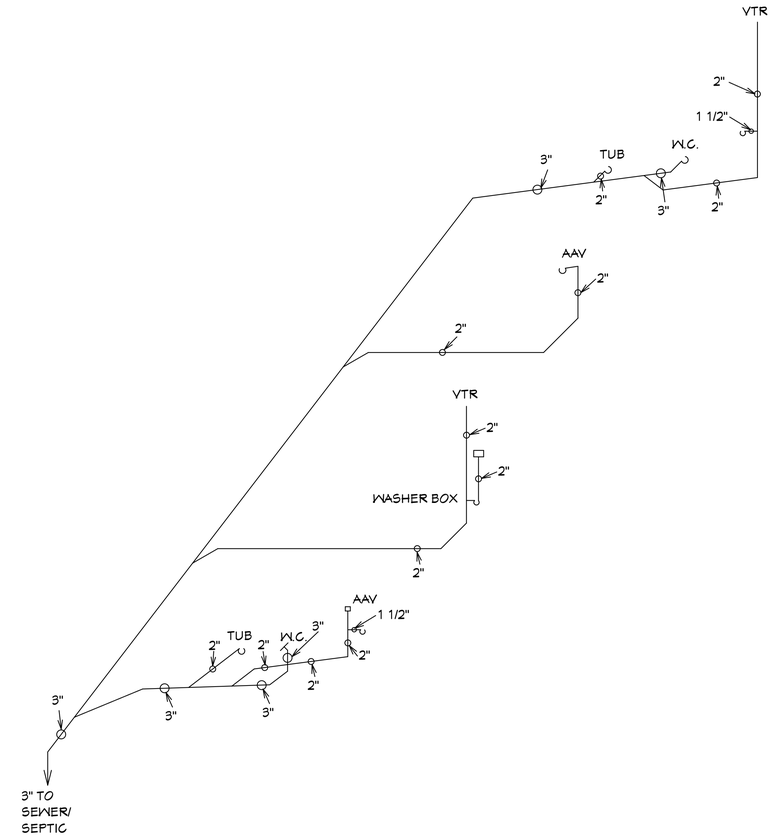


PLUMBING OUT GOING ISOMETRIC

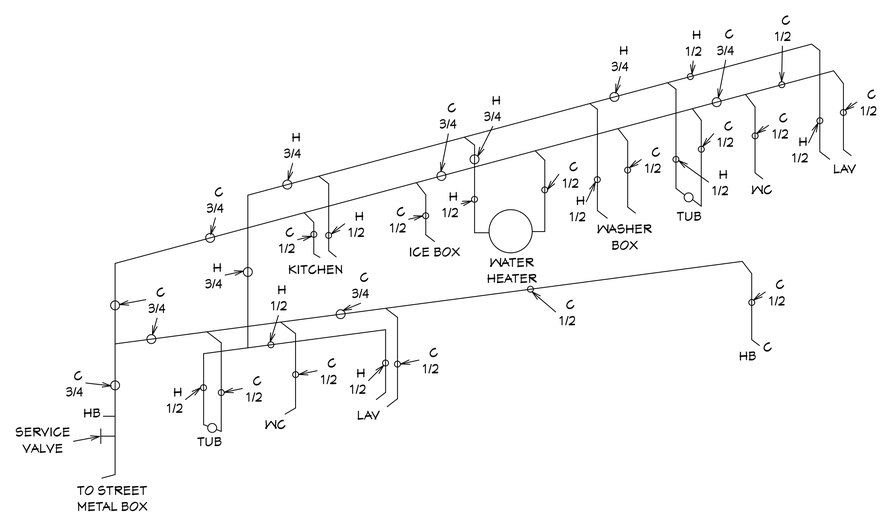


PLUMBING IN COMING ISOMETRIC

GENERAL NOTES

1. CONTRACTOR TO VERIFY ALL DIMENSIONS PRIOR TO START OF CONSTRUCTION. DIMENSIONS TAKE PREGEDENCE OVER SCALED DIMENSIONS.

2. MASONRY CONTRACTOR TO VERIFY MASONRY OPENING DIMENSIONS FOR ALL WINDOWS,SLIDING GLASS DOORS,& ENTRY DOORS,AS SHOWN ON THESE PLANS,WITH THE DOOR AND WINDOW MANUFACTURER PRIOR TO CONSTRUCTION.

3.IT IS THE CONTRACTORS RESPONSIBILITY TO CHECK THESE PLANS FOR DIMENSIONAL ERRORS,AND/OR OMISSIONS PRIOR TO CONSTRUCTION.IF ANY ERRORS OR OMISSIONS EXIST IN THE DRAWINGS OR SPECIFICATIONS,THE CONTRACTOR SHALL NOTIFY HICKS DRAFTING & DESIGN,IN WRITING,WITHIN 10 DAYS OF RECIEPT OF PLANS,AND PRIOR TO ANY CONSTRUCTION,OR CONTRACTOR ASSUMES ALL THE RESPONSIBILITY FOR THE RESULTS AND ALL THE COSTS OF RECTIFYING THE SAME.

4.HICKS DRAFTING & DESIGN DOES NOT ASSUME ANY RESPONSIBILITY FOR SUPERVISION OF CONSTRUCTION. CONTRACTOR TO ADHERE STRICTLY TO THE (8TH EDITION) OF THE 2023 FLORIDA RESIDENTIAL BUILDING CODE. CHAPTER 3 , AND SECTION 1609 OF THE (8TH EDITION) OF THE 2023 FLORIDA BUILDING CODE. TOGETHER WITH LOCAL AMENDMENTS, AND ALL OTHER APPLICABLE STATE, COUNTY, AND LOCAL STATUES,ORDININANCES, REGULATIONS, AND RULES.

NOTE:MASTER PLANS
FEMA/FLOOD ZONES CONSTRUCTION
NEW CONSTRUCTION OF ANY RESIDENTIAL STRUCTURE SHALL HAVE THE LOWEST FLOOR OR CONCRETE SLAB , INCLUDING GARAGE OR BASEMENT AND A/C W/H AND ALL EQUIPTMENT, ELEVATED TO FINISH FLOOR ELEV. OR ABOVE THE BASE FLOOD ELEVATION PLUS 1 FOOT. THIS SHALL APPLY TO HOUSES OR MANUFACTURED HOMES THAT ARE TO BE PLACED OR SUBSTANIALLY IMPROVED ON SITES IN A NEW MANUFACTURED HOME PARK OR SUBDIVISION.LCD CHAPTER 6 ,ARTICLE IV FLOOD HAZARD REDUCTION.

THIS RESIDENCE MAY NOT BE BUILT WITHIN 6'0" OF ANOTHER STRUCTURE OR 5'0" FROM ANY PROPERTY LINE PER SECTION R302.1(1) (INCLUDING OVERHANGS)

**REVIEWED FOR**
**PLUMBING CODE COMPLIANCE**
**WITH THE CAPE CORAL**
**BUILDING DIVISION**
BY: JM DATE: 10/25/2024
ALL PLUMBING INSTALLATIONS SHALL BE IN COMPLIANCE WITH THE FLORIDA BUILDING CODE, STATE AND LOCAL CODES. THE GRANTING OF A PERMIT DOES NOT RELIEVE THE CONTRACTOR OF RESPONSIBILITY TO COMPLY WITH ALL CODES AND ORDINANCES.

Alfred Quattrone
Digitally signed by Alfred Quattrone
Date: 2024-10-07 16:49:52
Al Quattrone, Professional Engineer, State of Florida, License No. 52741
This item has been digitally signed and sealed by Al Quattrone, PE, on 10/7/2024.

Printed copies of this document are not considered signed and sealed and the signature must be verified on any electronic copies.

10-05-2024


Quattrone & Associates, Inc.
Engineers, Planners, & Development Consultants
4301 Veronica Shoemaker Blvd. Fort Myers, FL 33916 (239) 936-5222 QAInc.net
Certificate of Authorization Number: 9865
AL QUATTRONE P.E. # 52741


COMPLIANCE STATEMENT
THESE PLANS HAVE BEEN DESIGNED BY A REGISTERED PROFESSIONAL ENGINEER AND THE DESIGN PARAMETERS FOR THE (8TH EDITION) OF TH 2023 FLORIDA RESIDENTIAL BUILDING CODE. CHAPTER 3 IN GENERAL AN SECTION 1609 OF THE (8TH EDITION) OF THE 2023 FLORIDA BUILDING CODE.

| REVISIONS: |
|---|
| 08-08-2024 |
| 10-05-2024 |


HICKS DRAFTING & DESIGN
4216 5TH STREET W
LEHIGH ACRES,FL. 33971
CELL:(239)462 -2734
E-MAIL:DHICKS928@AOL.COM


CAPE PALM 1 3/2/1 MODEL / LEFT HAND GARAGE / MONO FOOTER / 2023 CODE / 10 1/2" CANT

BUILDER: HABITAT FOR HUMANITY
3 BEDROOM 2 BATH HOME /160 MPH WIND LOADING
NEW HOUSE FOR:
LOT- /BLOCK- /UNIT- /SECTION-
TOWNSHIP- SOUTH/RANGE- EAST
STRAP#
ADDRESS:
ADDRESS:

10-05-2024 REVISIONS

DRAWN BY
DAVID HICKS

DATE: 03-29-2021

SCALE:1/4"=1'0"

JOB # 2024-048

SHEET
3 OF 10 SHEET

BLDMP24-000042

## SPECIFICATIONS

| NO. | DESCRIPTION |
|---|---|
| A) | PIPING SPECIFICATION |
| 1. | ALL WORKMANSHIP & MATERIALS SHALL BE IN ACCORDANCE WITH APPLICABLE NATIONAL, STATE, LOCAL CODES, RULES & ORDINANCES. |
| | THE CODES IN EFFECT FOR THIS PROJECT SHALL THE 2017 EDITION OF FBC WITH REVISIONS AND ALL ASSOCIATED INDUSTRY CODES BY REFRENCE. |
| 2. | THE CONTRACTOR SHALL VISIT THE JOB SITE & THOROUGHLY FAMILIARIZE HIMSELF WITH ALL EXISTING CONDITIONS. ANY DISCREPANCY FROM THE DRAWINGS SHALL BE REPORTED IMMEDIATELY TO THE ENGINEER OF RECORD. |
| 3. | ALL MATERIALS SHALL BE NEW. |
| 4. | ALL WORK SHALL BE PERFORMED BY A LICENSED PLUMBING CONTRACTOR IN A FIRST-CLASS WORKMANLIKE MANNER. THE COMPLETE SYSTEM SHALL BE FULLY OPERATIVE. |
| 5. | ALL EXCAVATION & BACK FILL AS REQUIRED FOR THIS PHASE OF CONSTRUCTION SHALL BE A PART OF THIS CONTRACT. |
| 6. | REQUIRED INSURANCE SHALL BE PROVIDED BY THIS CONTRACTOR FOR PROTECTION AGAINST PUBLIC LIABILITY & PROPERTY DAMAGE FOR THE DURATION OF WORK. |
| 7. | CONTRACTOR SHALL PAY FOR ALL PERMITS, FEES, INSPECTIONS & TEST. |
| 8. | ANY MATERIAL OR EQUIPMENT SUBSTITUTIONS MADE BY THE CONTRACTOR SHALL HAVE PRIOR WRITTEN APPROVAL BY THE ENGINEER OF RECORD. ANY CHANGES MADE WITHOUT APPROVAL WILL BE PAID BY THE CONTRACTOR TO RETURN TO THE ORIGINAL DESIGN. |
| 9. | DRAWINGS ARE DIAGRAMMATIC AND THE DRAWINGS SHALL NOT BE SCALED FOR THE EXACT LOCATION OF FIXTURES, PIPING, EQUIPMENT, ETC. |
| 10. | ALL WORK SHALL BE COORDINATED WITH OTHER TRADES TO AVOID INTERFERENCE. |
| 11. | THE CONTRACTOR SHALL VERIFY LOCATION, SIZE, TRAPS, INVERTS OF ALL EXISTING UTILITIES PRIOR TO BEGINNING CONSTRUCTION AND ADVISE ENGINEER OF ANY DISCREPANCIES. ANY COST RESULTING FROM DISCREPANCIES NOT REPORTED SHALL BE PAID BY THE CONTRACTOR. |
| 12. | WATER PIPING TO BE TYPE "L" COPPER BELOW GRADE, TYPE "M" COPPER ABOVE GRADE. |
| 13. | SOIL, WASTE & VENT PIPING SHALL BE PVC MIN. #40 DVW (ASTM D1785 & D2665). |
| 14. | ALL FIXTURES MUST BE PROVIDED WITH READILY ACCESSIBLE STOPS. |
| 15. | WHERE DISSIMILAR METALS ARE TO BE JOINED, APPROVED INSULATING UNIONS SHALL BE USED. |
| 16. | INSULATE HOT WATER LINES WITH 1" THICK SNAP ON INSULATION FIRST 8 FEET FROM WATER HEATER. |
| 17. | PROVIDE MINIMUM R-3 INSULATION ON HOT WATER PIPING IAW FBCE R403.4.2. |
| 18. | CONDENSATE LINES TO BE COPPER/PVC DEPENDING ON PROJECT REQUIREMENTS. INSULATE WITH 1/2" THICK ARMAFLEX INSULATION. |
| 19. | CONTRACTOR SHALL GUARANTEE ALL MATERIALS & WORKMANSHIP FREE FROM DEFECTS FOR A PERIOD OF NOT LESS THAN ONE (1) YEAR FROM DATE OF ACCEPTANCE. CORRECTION OF ANY DEFECTS SHALL BE COMPLETED WITHOUT ADDITIONAL CHARGE AND SHALL INCLUDE REPLACEMENT OR REPAIR OF ANY OTHER PHASE OF THE INSTALLATION WHICH MAY HAVE BEEN DAMAGED THEREBY. |
| 20. | PVC PIPING SHALL NOT BE USED IN COMMON PLENUM AREAS. |
| B) | WARRANTIES |
| 1. | CORRECTION OF ANY ENGINEERING DEFECT SHALL BE RECTIFIED WITHOUT ADDITIONAL CHARGE AND SHALL NOT INCLUDE REPLACEMENTS OR REPAIR OF ANY OTHER PHASE OF THE INSTALLATION, WHICH MAY HAVE BEEN DAMAGED THEREBY. |
| 2. | CONTRACTOR SHALL PRESSURE TEST ALL PRESSURIZED SYSTEMS PRIOR TO OPERATION AND NON-PRESSURIZED SYSTEMS SHALL BE GRAVITY TESTED PRIOR TO COMPLETION. |

## PIPING GENERAL NOTES

| NO. | DESCRIPTION |
|---|---|
| 1. | THE PURPOSE OF THIS DRAWING IS TO PROVIDE PIPE ROUTING AND CONSTRUCTION DETAILS. THESE PLANS DETAIL THE FINAL ARRANGEMENT OF EQUIPMENT AND THEIR ASSOCIATED APPENDAGES. |
| 2. | ANY AND ALL QUESTIONS AS TO THE INTENT OF, OR PROCEDURES SET FORTH IN THESE DRAWINGS MUST BE BROUGHT TO THE ATTENTION OF THE ENGINEER PRIOR TO THE SUBMISSION OF A BID. LACK OF KNOWLEDGE OR UNDERSTANDING OF PLANS SHALL NOT JUSTIFY ANY CLAIMS OR EXTRA COMPENSATION. |
| 3. | THE PIPING CONTRACTOR(S) SHALL COORDINATE ALL EQUIPMENT, PIPE AND CLEARANCES WITH ALL OTHER TRADES ON PROJECT, IN PRE-CONSTRUCTION MEETING, PRIOR TO ANY ORDER, FABRICATION, OR INSTALLATION. |
| 4. | ALL SYMBOLS MAY NOT BE USED FOR THIS PROJECT. |
| 5. | PRIOR TO CONSTRUCTION, THE PIPING CONTRACTOR(S) SHALL: a. VERIFY ALL EXISTING CONDITIONS IN THE FIELD PRIOR TO CONSTRUCTION. b. NOTIFY THE ENGINEER OF ANY CHANGES REQUIRED TO COMPLETE NEW CONSTRUCTION. |
| 6. | ALL PIPE SIZES ARE NOMINAL DIMENSIONS. VERIFY ALL DIMENSIONS AND LOCATIONS PRIOR TO FABRICATION OR INSTALLATION. |
| 7. | WATER LINES TO BE RUN OVER HEAD UNLESS SHOWN OTHERWISE. PIPES NOT ROUTED IN OVER HEAD ARE INDICATED AS HIDDEN LINES. |
| 8. | ALL HOT, HOT WATER RETURN, AND COLD WATER LINES SHALL BE INSULATED WITH 1" THICK ARMAFLEX INSULATION. INSULATION FOR HOT WATER SYSTEMS SHALL BE MIN R3. |
| 9. | ALL WALL PENETRATIONS SHALL BE SEALED BY THEIR RESPECTIVE TRADES. |
| 10. | INSTALLATION SHALL COMPLY WITH ALL APPLICABLE LAWS, CODES, AND ORDINANCES. |
| 11. | ALL SHOWERS AND SHOWER-TUBS SHALL HAVE PRESSURE BALANCING VALVES. |
| 12. | ALL HOSE BIBBS SHALL HAVE SHUT OFF VALVES AND VACUUM BREAKERS. |
| 13. | PROVIDE SHOCK ARRESTORS ON ALL DISHWASHER AND WASHING MACHINE WATER LINES (SIOUX CHIEF # 652-A/653-B OR EQUAL). |
| 14. | SANITARY AND GAS PIPE SIZES ARE DETAILED ON THE APPLICABLE RISER. |
| 15. | ALL EXHAUST DUCT SHALL BE SHEET METAL CONSTRUCTION. |
| 16. | ALL PIPE SHALL BE SUPPORTED IN ACCORDANCE WITH FBCP 308. |
| 17. | ALL PLUMBING FIXTURES SHALL COMPLY WITH TABLE 604.4 OF F.B.C.P. |

## PIPING GENERAL NOTES (cont'd)

| NO. | DESCRIPTION |
|---|---|
| 18. | THE FINAL OVERALL CONFIGURATION SHALL BE AS INDICATED. |
| 19. | DIMENSIONS PROVIDED FOR REFERENCE WILL BE MARKED (REF.) AND THE CONTRACTOR SHALL CONFIRM THE LOCATION IN THE FIELD. |
| 20. | ALL SANITARY PIPING SHALL BE ROUTED IN ACCORDANCE WITH FBCP SECTION 704. |
| 21. | INSULATION OF ALL GAS PIPING SHALL BE PER FBC GAS PIPING STANDARD. |
| 22. | ALL GAS PIPING SHALL BE PRESSURE TESTED FOR PRIOR TO CONNECTING GAS SUPPLY. |
| 23. | CONTRACTOR SHALL VERIFY ALL BTU's/GAS CONSUMPTION WITH SPECIFIC MANUFACTURER SPECIFICATIONS PRIOR TO INSTALLATION. |
| 24. | THE CONTRACTOR SHALL VERIFY LOCATION OF ALL EQUIPMENT PRIOR TO INSTALLATION. |
| 25. | ALL STORM SERVICES SHALL BE ROUTED PER FBCP1104. |
| 26. | PIPE CLEAN-OUTS ARE SHOWN ON THE ISOMETRIC DETAILS AND SHALL BE PROVIDED PER FBCP 708. |
| 27. | ALL SANITARY AND STORM PIPING UNDER THE HOUSE SHALL COMPLY WITH ASTM F2536 SCH 40 PVC PIPE, STAINLESS STEEL RODS AND HANGERS. |
| 28. | PIPE ABOVE CEILINGS SHALL BE WRAPPED WITH ACOUSTIC FIBERGLASS INSULATION. LATERALS SHALL BE PVC AND RISERS CAST IRON. |
| 29. | ALL HOSE BIBBS SHALL BE RECESSED (BRADLEY 7910 OR EQUAL). SEE ARCHITECTURAL PLANS |
| 30. | PROVIDE 3/8" CW. PIPING TO REFRIDGERATOR/FREEZER. |
| 31. | ALL FLOOR DRAINS AND SINKS SHALL BE PROVIDED WITH A TRAP PRIMER. |
| 32. | CONTRACTOR SHALL ENSURE ALL GAS SYSTEMS ARE FULLY GROUNDED. |

## PIPING MATERIAL

| SERVICE | LOCATION | MATERIAL | SPECIFICATION |
|---|---|---|---|
| POTABLE WATER | ABOVE GROUND | COPPER TYPE 'M' | ASTM B 75; ASTM B 88; ASTM B 251; ASTM B 306 |
| | BELOW GROUND | COPPER TYPE 'L' | ASTM B 75; ASTM B 88; ASTM B 251; ASTM B 306 |
| SANITARY | ABOVE GROUND (HEADER) | PVC | ASTM D 2665; ASTM F 891; CSA B181.2; ASTM F 1488 |
| | ABOVE GROUND (RISER) | CAST IRON | ASTM A 74; CISPI 301; ASTM A 888 |
| | BELOW GROUND (HEADER) | PVC | ASTM D 2665; ASTM F 891; CSA B181.2; ASTM F 1488 |
| VENT | ALL | PVC | ASTM D 2665; ASTM F 891; CSA B181.2; ASTM F 1488 |
| STORM WATER | ABOVE GROUND (HEADER) | PVC | ASTM D 2665; ASTM F 891; CSA B181.2; ASTM F 1488 |
| | ABOVE GROUND (RISER) | CAST IRON | ASTM A 74; CISPI 301; ASTM A 888 |
| | BELOW GROUND (HEADER) | PVC | ASTM D 2665; ASTM F 891; CSA B181.2; ASTM F 1488 |

MEP EQUIPMENT SHALL BE LOCATED ABOVE THE BASE FLOOD ELEVATION +1 FOOT, EXCEPT AS REQUIRED TO ADDRESS LIFE SAFETY REQUIREMENTS.

ALL DOMESTIC AND IRRIGATION WATER SERVICES SHALL BE POTABLE.

GENERAL NOTES

1. CONTRACTOR TO VERIFY ALL DIMENSIONS PRIOR TO START OF CONSTRUCTION. DIMENSIONS TAKE PRECEDENCE OVER SCALED DIMENSIONS.

2. MASONRY CONTRACTOR TO VERIFY MASONRY OPENING DIMENSIONS FOR ALL WINDOWS, SLIDING GLASS DOORS, & ENTRY DOORS, AS SHOWN ON THESE PLANS, WITH THE DOOR AND WINDOW MANUFACTURER PRIOR TO CONSTRUCTION.

3. IT IS THE CONTRACTORS RESPONSIBILITY TO CHECK THESE PLANS FOR DIMENSIONAL ERRORS, AND/OR OMISSIONS PRIOR TO CONSTRUCTION. IF ANY ERRORS OR OMISSIONS EXIST IN THE DRAWINGS OR SPECIFICATIONS, THE CONTRACTOR SHALL NOTIFY HICKS DRAFTING & DESIGN, IN WRITING, WITHIN 10 DAYS OF RECIEPT OF PLANS, AND PRIOR TO ANY CONSTRUCTION, OR CONTRACTOR ASSUMES ALL THE RESPONSIBILITY FOR THE RESULTS AND ALL THE COSTS OF RECTIFYING THE SAME.

4. HICKS DRAFTING & DESIGN DOES NOT ASSUME ANY RESPONSIBILITY FOR SUPERVISION OF CONSTRUCTION. CONTRACTOR TO ADHERE STRICTLY TO THE (8TH EDITION) OF THE 2023 FLORIDA RESIDENTIAL BUILDING CODE. CHAPTER 3 , AND SECTION 1609 OF THE (8TH EDITION) OF THE 2023 FLORIDA BUILDING CODE. TOGETHER WITH LOCAL AMENDMENTS, AND ALL OTHER APPLICABLE STATE, COUNTY, AND LOCAL STATUES, ORDININANCES, REGULATIONS, AND RULES.

NOTE: MASTER PLANS
FEMA/FLOOD ZONES CONSTRUCTION
NEW CONSTRUCTION OF ANY RESIDENTIAL STRUCTURE SHALL HAVE THE LOWEST FLOOR OR CONCRETE SLAB , INCLUDING GARAGE OR BASEMENT AND A/C W/H AND ALL EQUIPTMENT, ELEVATED TO FINISH FLOOR ELEV. OR ABOVE THE BASE FLOOD ELEVATION PLUS 1 FOOT. THIS SHALL APPLY TO HOUSES OR MANUFACTURED HOMES THAT ARE TO BE PLACED OR SUBSTANIALLY IMPROVED ON SITES IN A NEW MANUFACTURED HOME PARK OR SUBDIVISION. LCD CHAPTER 6 ,ARTICLE IV FLOOD HAZARD REDUCTION.

THIS RESIDENCE MAY NOT BE BUILT WITHIN 6'0" OF ANOTHER STRUCTURE OR 5'0" FROM ANY PROPERTY LINE PER SECTION R302.1(1) (INCLUDING OVERHANGS)

**REVIEWED FOR**
**PLUMBING CODE COMPLIANCE**
**WITH THE CAPE CORAL**
**BUILDING DIVISION**
BY: JM DATE: 10/25/2024
ALL PLUMBING INSTALLATIONS SHALL BE IN COMPLIANCE WITH THE FLORIDA BUILDING CODE, STATE AND LOCAL CODES. THE GRANTING OF A PERMIT DOES NOT RELIEVE THE CONTRACTOR OF RESPONSIBILITY TO COMPLY WITH ALL CODES AND ORDINANCES.

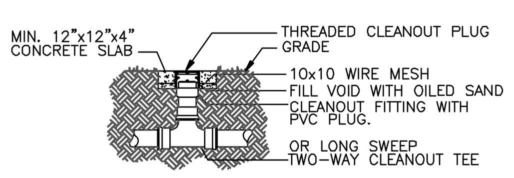


CLEAN-OUT TO GRADE (CTG) (C8)
SCALE: N.T.S.

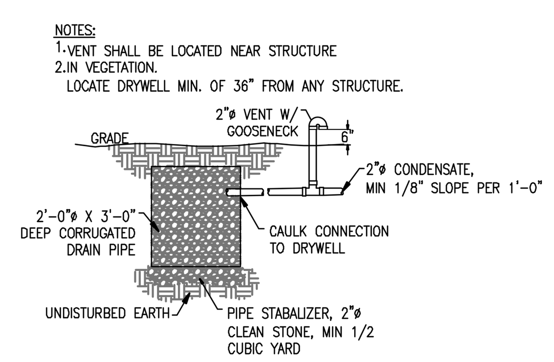


DRYWELL DETAIL (C6)
SCALE: N.T.S.

NOTE:
THE AIR GAP BETWEEN THE INDIRECT WAST PIPE AND THE FLOOD LEVEL RIM OF THE RECEPTOR SHALL BE A MINIMUM OF TWICE THE EFFECTIVE OPENING OF THE INDIRECT WASTE PIPE, PER FBCP 802.2.1.

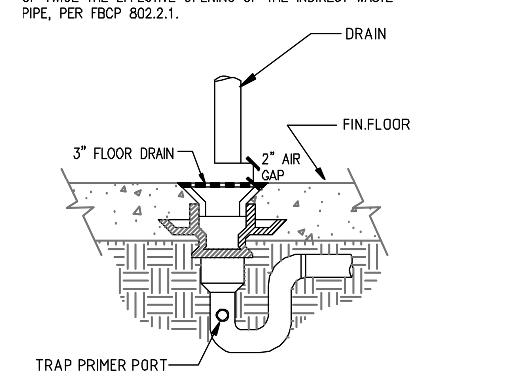


INDIRECT DRAIN W/ TRAP PRIMER (C5)
SCALE: N.T.S.

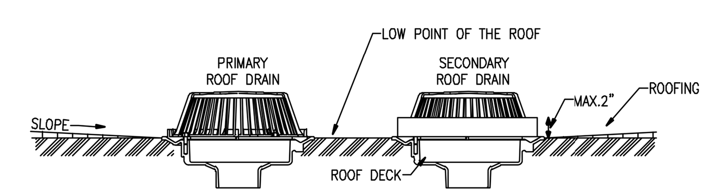


SECONDARY (EMERGENCY OVERFLOW) DRAIN (C6)
SCALE: N.T.S.

NOTE:
1. PIPING ARRANGEMENT SHOWN IS SCHEMATIC. ADJUST TO SUIT FIELD CONDITIONS. REFER TO ISOMETRIC RISER FOR PIPE SIZES.
2. SET HEATER THERMOSTAT AT 120 DEG F.

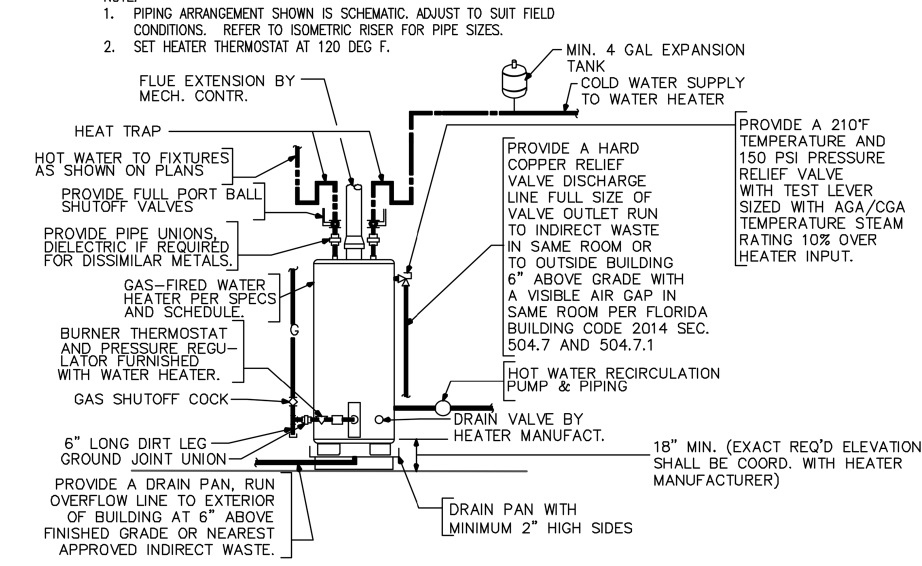


WATER HEATER W/ RETURN (B2)
SCALE: N.T.S.

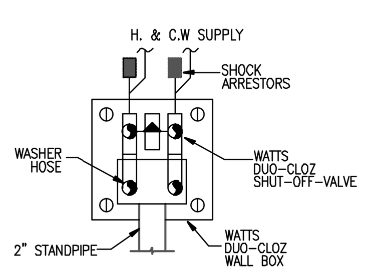


WASHING MACHINE MIXING BOX (B8)
SCALE: N.T.S.

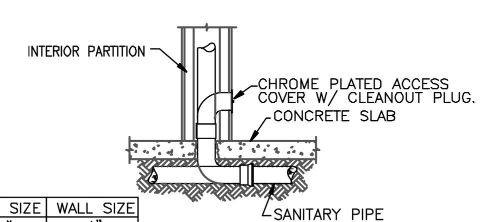


| PIPE SIZE | WALL SIZE |
|---|---|
| 2" | 4" |
| 3" | 4" |
| 4" | 6" |

WALL PIPE CLEAN OUT (B6)
SCALE: N.T.S.

NOTE:
ANY VENT THAT IS WITHIN 10' OF ANY DOOR, WINDOW, OR EXHAUST OPENING SHALL EXTEND NOT LESS THAN 3' ABOVE SUCH.

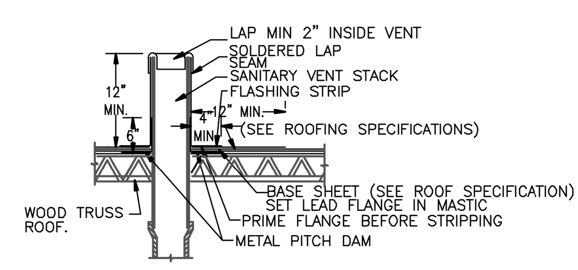


SANITARY VENT THRU ROOF (B5)
SCALE: N.T.S.

NOTE:
PROVIDE THERMOSTATIC VALVES TO CONTROL DISCHARGE TEMPERATURES:
- FBCP 416.5 – LAVATORIES AND GROUP WASH FIXTURES: POINT OF USE CONTROL IAW ASSE 1070/CSA B125.3; LIMIT 49 DEG C (120 DEG F)
- FBCP 424.3 – INDIVIDUAL SHOWERS: POINT OF USE CONTROL IAW ASSE 1016/CSA B125; LIMIT 49 DEG C (120 DEG F)
- FBCP 424.5 – BATHTUB & WHIRLPOOL BATHTUB: IAW ASSE 1070; LIMIT 49 DEG C (120 DEG F)

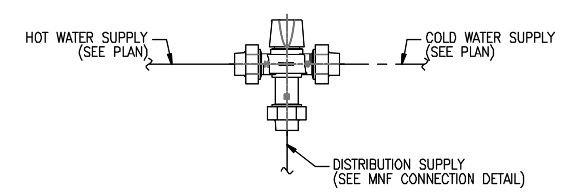


ANTI-SCALD PIPE SCHEMATIC (B3)
SCALE: N.T.S.

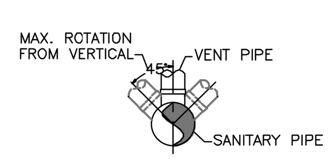


WASH VENT CONNECTION (A8)
SCALE: N.T.S.

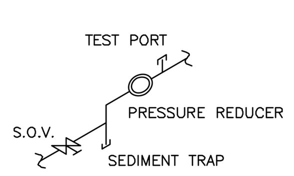


GAS PRESSURE REDUCER CONNECTION (A6)
SCALE: N.T.S.

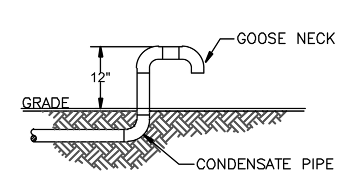


CONDENSATE DISCHARGE (A5)
SCALE: N.T.S.

NOTE:
1. ALL SANITARY AND STORM PIPING UNDER THE HOUSE SHALL COMPLY WITH ASTM F2536 SCH 40 PVC PIPE, STAINLESS STEEL RODS AND HANGERS.

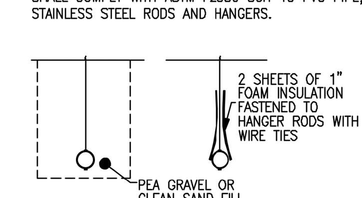


PIPE BELOW GRADE BEAM DETAIL (A3)
SCALE: N.T.S.

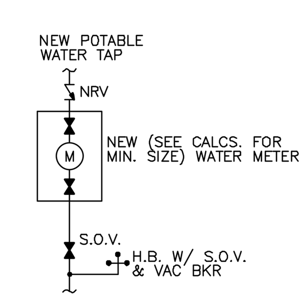


PW SERVICE CONNECTION (A2)
SCALE: N.T.S.

# PLUMBING SECTIONS

Alfred Quattrone
Digitally signed by Alfred Quattrone
Date: 2024-10-07 16:49:38
Al Quattrone, Professional Engineer, State of Florida, License No. 52741
This item has been digitally signed and sealed by Al Quattrone, PE, on 10/7/2024.
Printed copies of this document are not considered signed and sealed and the signature must be verified on any electronic copies.

10-05-2024


Quattrone & Associates, Inc.
Engineers, Planners, & Development Consultants
4301 Veronica Shoemaker Blvd. Fort Myers, FL 33916 (239) 936-5222 QAInc.net
Certificate of Authorization Number: 9465
AL QUATTRONE P.E. # 52741


COMPLIANCE STATEMENT
THESE PLANS HAVE BEEN DESIGNED BY A REGISTERED PROFESSIONAL ENGINEER AND THE DESIGN PARAMETERS FOR THE (8TH EDITION) OF THE 2023 FLORIDA RESIDENTIAL BUILDING CODE .CHAPTER 3 IN GENERAL AND SECTION 1609 OF THE (8TH EDITION) OF THE 2023 FLORIDA BUILDING CODE.

REVISIONS:
08-08-2024
10-05-2024


HICKS DRAFTING & DESIGN
4216 5TH STREET W
LEHIGH ACRES,FL. 33971
CELL:(239)462 -2734
E-MAIL:DHICKS928@AOL.COM


CAPE PALM 1 3/2/1 MODEL / LEFT HAND GARAGE / MONO FOOTER / 2023 CODE / 10 1/2" CANT

10-05-2024 REVISIONS

BUILDER: HABITAT FOR HUMANITY
3 BEDROOM 2 BATH HOME /160 MPH WIND LOADING
NEW HOUSE FOR:
LOT- /BLOCK- /UNIT- /SECTION-
TOWNSHIP- SOUTH/RANGE- EAST
STRAP#
ADDRESS:
ADDRESS:

DRAWN BY
DAVID HICKS

DATE: 03-29-2021

SCALE:1/4"=1'0"

JOB # 2024-048

SHEET
4 OF 10 SHEET

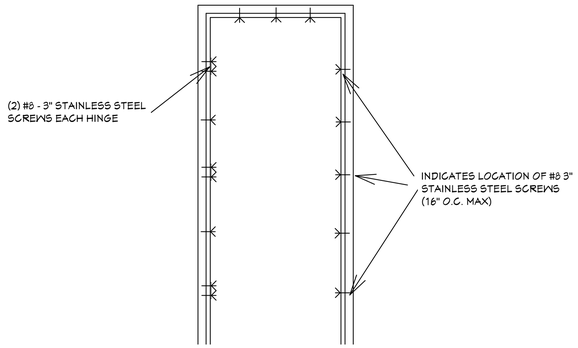


TYPICAL DOOR INSTALLATION DETAIL

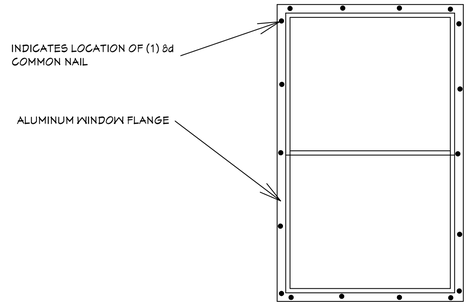


TYPICAL WINDOW INSTALLATION DETAIL

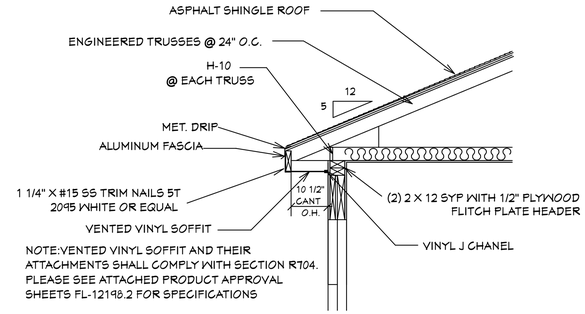


NOTE:VENTED VINYL SOFFIT AND THEIR ATTACHMENTS SHALL COMPLY WITH SECTION R704. PLEASE SEE ATTACHED PRODUCT APPROVAL SHEETS FL-12198.2 FOR SPECIFICATIONS

SOFFIT DETAIL R703.1.2.1
SCALE:N.T.S.

GENERAL NOTES

1. CONTRACTOR TO VERIFY ALL DIMENSIONS PRIOR TO START OF CONSTRUCTION.DIMENSIONS TAKE PRECEDENCE OVER SCALED DIMENSIONS.

2. MASONRY CONTRACTOR TO VERIFY MASONRY OPENING DIMENSIONS FOR ALL WINDOWS,SLIDING GLASS DOORS,& ENTRY DOORS,AS SHOWN ON THESE PLANS,WITH THE DOOR AND WINDOW MANUFACTURER PRIOR TO CONSTRUCTION.

3.IT IS THE CONTRACTORS RESPONSIBILITY TO CHECK THESE PLANS FOR DIMENSIONAL ERRORS,AND/OR OMISSIONS PRIOR TO CONSTRUCTION.IF ANY ERRORS OR OMISSIONS EXIST IN THE DRAWINGS OR SPECIFICATIONS,THE CONTRACTOR SHALL NOTIFY HICKS DRAFTING & DESIGN,IN WRITING,WITHIN 10 DAYS OF RECIEPT OF PLANS,AND PRIOR TO ANY CONSTRUCTION,OR CONTRACTOR ASSUMES ALL THE RESPONSIBILITY FOR THE RESULTS AND ALL THE COSTS OF RECTIFYING THE SAME.

4.HICKS DRAFTING & DESIGN DOES NOT ASSUME ANY RESPONSIBILITY FOR SUPERVISION OF CONSTRUCTION. CONTRACTOR TO ADHERE STRICTLY TO THE (8TH EDITION) OF THE 2023 FLORIDA RESIDENTIAL BUILDING CODE. CHAPTER 3 , AND SECTION 1609 OF THE (8TH EDITION) OF THE 2023 FLORIDA BUILDING CODE. TOGETHER WITH LOCAL AMENDMENTS, AND ALL OTHER APPLICABLE STATE, COUNTY, AND LOCAL STATUES,ORDININANCES, REGULATIONS, AND RULES.

NOTE:MASTER PLANS
FEMA/FLOOD ZONES CONSTRUCTION
NEW CONSTRUCTION OF ANY RESIDENTIAL STRUCTURE SHALL HAVE THE LOWEST FLOOR OR CONCRETE SLAB INCLUDING GARAGE OR BASEMENT AND A/C W/H AND ALL EQUIPTMENT, ELEVATED TO FINISH FLOOR ELEV. OR ABOVE THE BASE FLOOD ELEVATION PLUS 1 FOOT. THIS SHALL APPLY TO HOUSES OR MANUFACTURED HOMES THAT ARE TO BE PLACED OR SUBSTANIALLY IMPROVED ON SITES IN A NEW MANUFACTURED HOME PARK OR SUBDIVISION.LCD CHAPTER 6 ,ARTICLE IV FLOOD HAZARD REDUCTION.

THIS RESIDENCE MAY NOT BE BUILT WITHIN 6'0" OF ANOTHER STRUCTURE OR 5'0" FROM ANY PROPERTY LINE PER SECTION R302.1(1) (INCLUDING OVERHANGS)

BLDMP24-000042

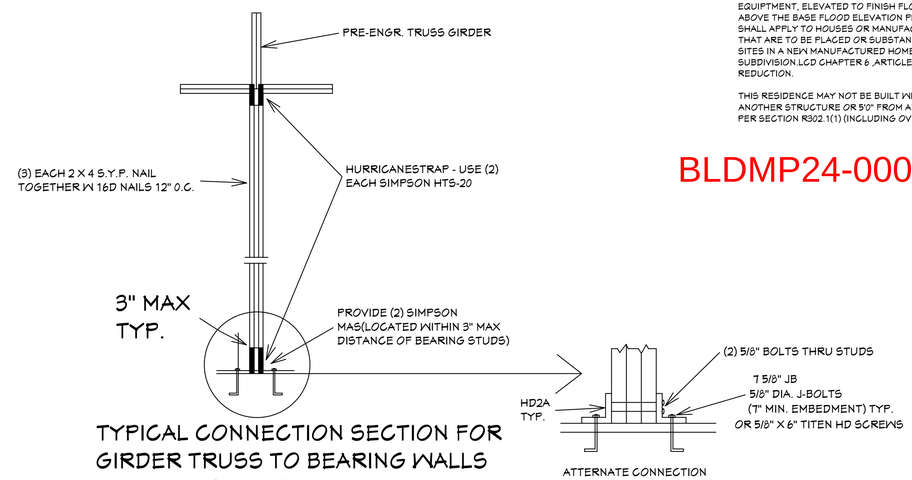


TYPICAL CONNECTION SECTION FOR GIRDER TRUSS TO BEARING WALLS WITH REACTIONS OVER #2000

SCALE:1/2"=1'0"

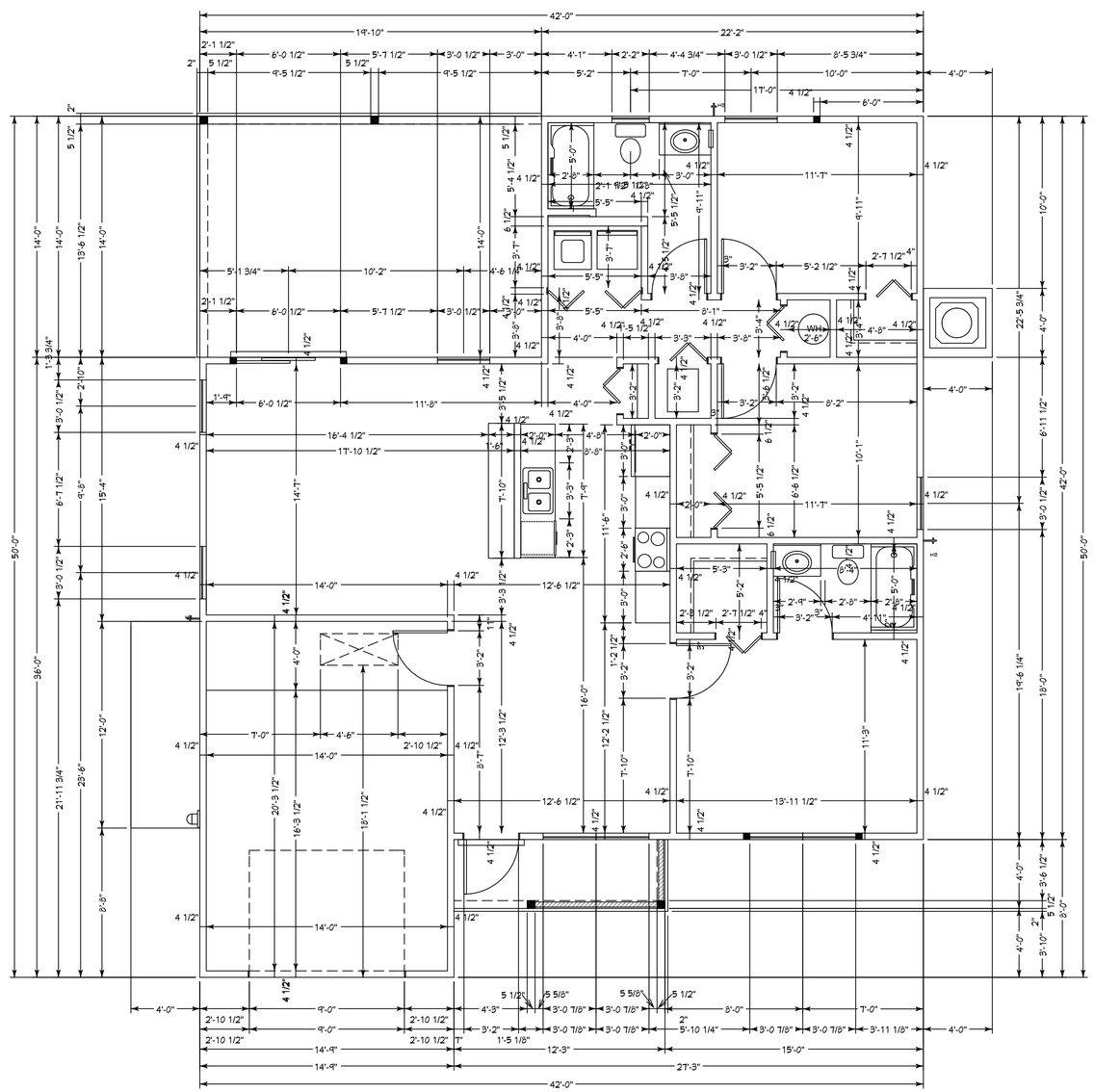

DIMENSIONAL FLOOR PLAN

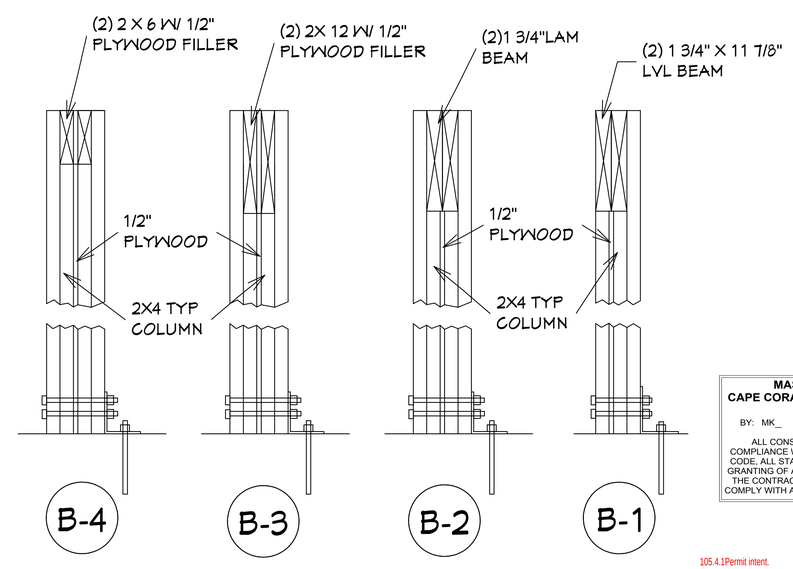


DETAIL

SCALE:1 1/2"=1'0"

**MASTERED PLAN**
**CAPE CORAL BUILDING DIVISION**

BY: MK_ DATE: 11/07/2024

ALL CONSTRUCTION SHALL BE IN COMPLIANCE WITH THE FLORIDA BUILDING CODE, ALL STATE AND LOCAL CODES. THE GRANTING OF A PERMIT DOES NOT RELIEVE THE CONTRACTOR OF RESPONSIBILITY TO COMPLY WITH ALL CODES AND ORDINANCES.

105.4.1Permit intent.
A permit issued shall be construed to be a license to proceed with the work and not as authority to violate, cancel, alter or set aside any of the provisions of the technical codes, nor shall issuance of a permit prevent the building official from thereafter requiring a correction of errors in plans, construction or violations of this code. Every permit issued shall become invalid unless the work authorized by such permit is commenced within 6 months after its issuance, or if the work authorized by such permit is suspended or abandoned for a period of 6 months after the time the work is commenced.

Alfred Quattrone
Digitally signed by Alfred Quattrone
Date: 2024-10-07 16:49:26
10-05-2024

Al Quattrone, Professional Engineer, State of Florida, License No. 52741
This item has been digitally signed and sealed by Al Quattrone, PE, on 10/7/2024.

Printed copies of this document are not considered signed and sealed and the signature must be verified on any electronic copies.


Quattrone & Associates, Inc.
Engineers, Planners, & Development Consultants
4301 Veronica Shoemaker Blvd. Fort Myers, FL 33916 (239) 936-5222 QAI@cox.net
Certificate of Authorization Number: 9865
AL QUATTRONE P.E. # 52741


COMPLIANCE STATEMENT
THESE PLANS HAVE BEEN DESIGNED BY A REGISTERED PROFESSIONAL ENGINEER AND THE DESIGN PARAMETERS FOR THE (8TH EDITION) OF TH 2023 FLORIDA RESIDENTIAL BUILDING CODE. CHAPTER 3 IN GENERAL AN SECTION 1609 OF THE (8TH EDITION) OF THE 2023 FLORIDA BUILDING CODE.

REVISIONS:
08-08-2024
10-05-2024


HICKS DRAFTING & DESIGN
4216 5TH STREET W
LEHIGH ACRES,FL. 33971
CELL:(239)462 -2734
E-MAIL:DHICKS928@AOL.COM


CAPE PALM 1 3/2/1 MODEL / LEFT HAND GARAGE / MONO FOOTER / 2023 CODE / 10 1/2" CANT

BUILDER: HABITAT FOR HUMANITY
3 BEDROOM 2 BATH HOME /160 MPH WIND LOADING
NEW HOUSE FOR:
LOT- /BLOCK- /UNIT- /SECTION-
TOWNSHIP- SOUTH/RANGE- EAST
STRAP#
ADDRESS:
ADDRESS:

10-05-2024 REVISIONS

DRAWN BY
DAVID HICKS

DATE: 03-29-2021

SCALE:1/4"=1'0"

JOB # 2024-048

SHEET
5 OF 10 SHEET

NOTE: THIS SECTION SHOWS FOR THE EXTERIOR SHEATHING TO EXTEND TO THE TOP OF UPPER 2 X OF THE DOUBLE TOP PLATE OF THE WALLS.HOWEVER IT IS ACCEPIBLE THAT THE EXTERIOR SHEATHING IS NAILED TO THE BOTTOM PLATE OF THE DOUBLE TOP PLATE.USE SINGLE ROW OF 8D RINGSHANK NAILS @ 4" O.C. AT EDGES AND 6" O.C. AT INTERIOR LOCATIONS.THE BOTTOM PLATE IS TO BE TIED TO THE TOP PLATE AND THE ROOF TRUSS WITH SIMPSON H-10A CONNECTOR.DOUBLE TOP PLATE ATTACHED TO WALL STUD WITH H-2.5A CLIP AS SHOWN ON WALL FRAMING SECTION SHEET 5 OF 7.

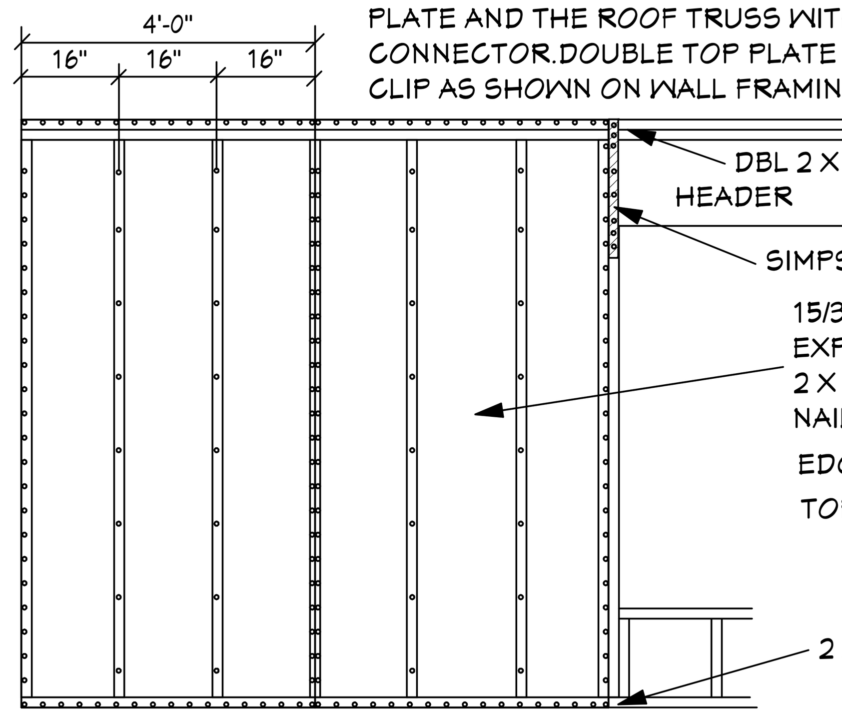


DBL 2 X 4 TOP PLATE W/ SPLICES STAGGERED @ 4'
HEADER
SIMPSON LSTA-18
15/32" X 4' X 8' CDX OR 7/16" OSB 24/16 RATED EXPOSURE I EXTERIOR SHEATHING (FROM DBL 2 X 4 TOP PLATE TO 2" X 4" P.T. BOTTOM PLATE) NAILING PATTERN:
EDGE @4" O.C.-INTERIOR @ 6" O.C.
TOP & BOTTOM DBL 4"
2 X 4 P.T. BOTTOM PLATE

NOTE: ALL NAILING @ ALL SURFACES TO BE NAILED W/8d RING SHANK NAILS

## EXTERIOR WALL NAILING DETAIL

SCALE: N.T.S.

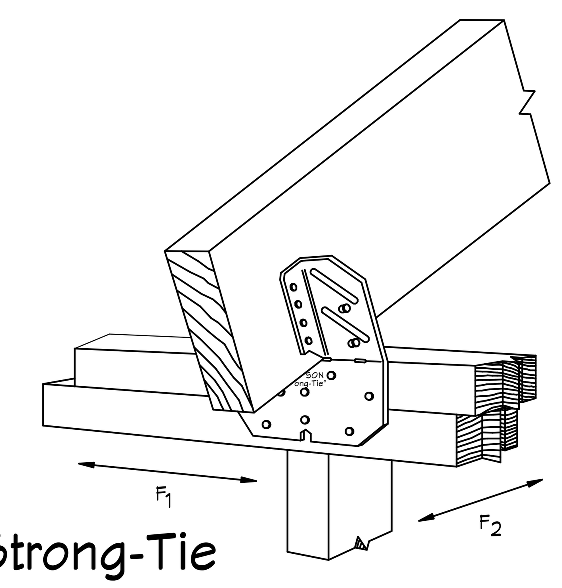


Simpson Strong-Tie
H10A

HURRICANE CLIP
@ EXT. BEARING WALL
1/4

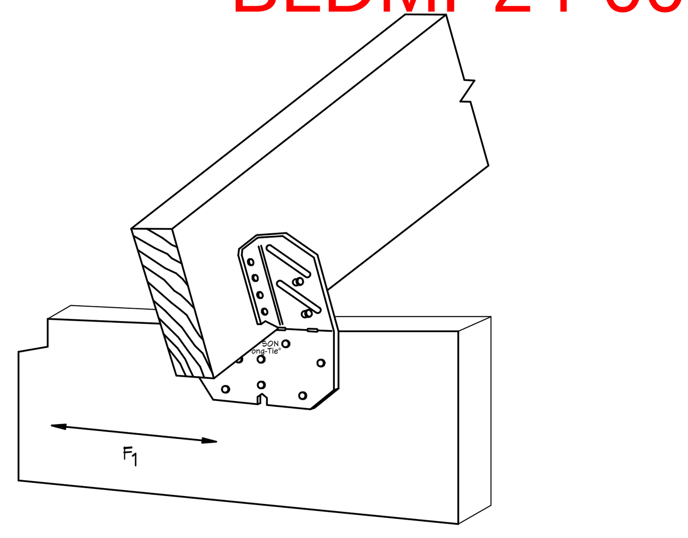


Simpson Strong-Tie
H10A

HURRICANE CLIP @
EXT. BEARING WD. BEAM
2/4

BLDMP24-000042

GENERAL NOTES

1. CONTRACTOR TO VERIFY ALL DIMENSIONS PRIOR TO START OF CONSTRUCTION.DIMENSIONS TAKE PRECEDENCE OVER SCALED DIMENSIONS.

2. MASONRY CONTRACTOR TO VERIFY MASONRY OPENING DIMENSIONS FOR ALL WINDOWS,SLIDING GLASS DOORS,& ENTRY DOORS,AS SHOWN ON THESE PLANS,WITH THE DOOR AND WINDOW MANUFACTURER PRIOR TO CONSTRUCTION.

3.IT IS THE CONTRACTORS RESPONSIBILITY TO CHECK THESE PLANS FOR DIMENSIONAL ERRORS,AND/OR OMISSIONS PRIOR TO CONSTRUCTION.IF ANY ERRORS OR OMISSIONS EXIST IN THE DRAWINGS OR SPECIFICATIONS,THE CONTRACTOR SHALL NOTIFY HICKS DRAFTING & DESIGN,IN WRITING,WITHIN 10 DAYS OF RECIEPT OF PLANS,AND PRIOR TO ANY CONSTRUCTION,OR CONTRACTOR ASSUMES ALL THE RESPONSIBILITY FOR THE RESULTS AND ALL THE COSTS OF RECTIFYING THE SAME.

4.HICKS DRAFTING & DESIGN DOES NOT ASSUME ANY RESPONSIBILITY FOR SUPERVISION OF CONSTRUCTION. CONTRACTOR TO ADHERE STRICTLY TO THE (8TH EDITION) OF THE 2023 FLORIDA RESIDENTIAL BUILDING CODE. CHAPTER 3 , AND SECTION 1609 OF THE (8TH EDITION) OF THE 2023 FLORIDA BUILDING CODE. TOGETHER WITH LOCAL AMENDMENTS, AND ALL OTHER APPLICABLE STATE, COUNTY, AND LOCAL STATUES,ORDININANCES, REGULATIONS, AND RULES.

NOTE:MASTER PLANS
FEMA/FLOOD ZONES CONSTRUCTION
NEW CONSTRUCTION OF ANY RESIDENTIAL STRUCTURE SHALL HAVE THE LOWEST FLOOR OR CONCRETE SLAB , INCLUDING GARAGE OR BASEMENT AND A/C W/H AND ALL EQUIPTMENT, ELEVATED TO FINISH FLOOR ELEV. OR ABOVE THE BASE FLOOD ELEVATION PLUS 1 FOOT. THIS SHALL APPLY TO HOUSES OR MANUFACTURED HOMES THAT ARE TO BE PLACED OR SUBSTANIALLY IMPROVED ON SITES IN A NEW MANUFACTURED HOME PARK OR SUBDIVISION.LCD CHAPTER 6 ,ARTICLE IV FLOOD HAZARD REDUCTION.

THIS RESIDENCE MAY NOT BE BUILT WITHIN 6'0" OF ANOTHER STRUCTURE OR 5'0" FROM ANY PROPERTY LINE PER SECTION R302.1(1) (INCLUDING OVERHANGS)


Alfred Quattrone
Digitally signed by Alfred Quattrone
Date: 2024-10-07 16:49:15
Al Quattrone, Professional Engineer, State of Florida, License No. 52741
This item has been digitally signed and sealed by Al Quattrone, PE, on 10/7/2024.
Printed copies of this document are not considered signed and sealed and the signature must be verified on any electronic copies.
10-05-2024
Quattrone & Associates, Inc.
Engineers, Planners, & Development Consultants
4301 Veronica Shoemaker Blvd. Fort Myers, FL 33916 (239) 936-5222 QAInc.net
Certificate of Authorization Number: 9465
AL QUATTRONE P.E. # 52741


COMPLIANCE STATEMENT
THESE PLANS HAVE BEEN DESIGNED BY A REGISTERED PROFESSIONAL ENGINEER AND THE DESIGN PARAMETERS FOR THE (8TH EDITION) OF THE 2023 FLORIDA RESIDENTIAL BUILDING CODE .CHAPTER 3 IN GENERAL AND SECTION 1609 OF THE (8TH EDITION) OF THE 2023 FLORIDA BUILDING CODE.

REVISIONS:
08-08-2024
10-05-2024

## DOOR LEGEND

| WIDTH | | HEIGHT | | |
|---|---|---|---|---|
| FEET | INCHES | FEET | INCHES | PKT= POCKET<br>BF= BI-FOLD<br>BP= BI-PASS<br>FR= FRENCH<br>FX= FIXED<br>MIR= MIRRORED<br>O.H.G.D.=OVER HEAD GARAGE DOOR<br>S.G.D.=SLIDING GLASS DOOR<br>S.C.= SOLID CORE |
| 3 | 0 | 6 | 8 | PKT |

INTERIOR DOOR SCHEDULE

| ID | QTY. | ROOM | SIZE | MANUF | DESIGNATION | NOTES |
|---|---|---|---|---|---|---|
| 1 | 1 | GARAGE | 3068 | | | SOLID CORE |
| 2 | 1 | N/A | N/A | | 4 BEDROOM ONLY | |
| 3 | 1 | N/A | N/A | | 4 BEDROOM ONLY | |
| 4 | 1 | UTILITY | (2) 2868 B.F. | | | |
| 5 | 1 | PANTRY | 2668 B.F. | | | |
| 6 | 1 | HALL | 2868 B.F. | | | |
| 7 | 1 | BATH # 1 | 3068 | | | |
| 8 | 1 | BEDROOM#1 | 3068 | | | |
| 9 | 1 | BEDROOM#1 | 2668 B.F. | | | |
| 10 | 1 | HALL | 2668 B.F. | | | |
| 11 | 1 | BEDROOM# 2 | 3068 | | | |
| 12 | 1 | BEDROOM# 2 | (2)2868 B.F. | | | |
| 13 | 1 | MASTER BED | 3068 | | | |
| 14 | 1 | MASTER W.I.C. | 2668 B.F. | | | |
| 15 | 1 | MASTER BATH | 3068 | | | |

AREA SCHEDULE

| | |
|---|---|
| LIVING A/C | 1305 SQ. FT. |
| ENTRY | 49 SQ. FT. |
| GARAGE | 300 SQ. FT. |
| LANAI | 277 SQ. FT. |
| TOTAL | 1931 SQ.FT. |

°NOTE:
BOTTOM CHORD OF ALL TRUSSES IN LANAI AND ENTRY (AREAS EXPOSED TO WIND).
IT IS ACCEPTABLE TO ADD SHEATHING IN THESE AREAS AND SHEATHING TO BE 15/32" EXTERIOR GRADE PLYWOOD OR 7/16" O.S.B. BOARD. ATTACH PLYWOOD OR O.S.B. BOARD TO BOTTOM CHORDS OF ROOF TRUSSES WITH 10d NAILS AT 4" O.C. AT EDGES AND 6" O.C. AT INTERMEDIATE SUPPORTS. IT IS ACCEPTABLE TO COVER PLYWOOD WITH SOLID VINYL SOFFIT FL-12198.2.ATTACH SOLID VINYL SOFFIT TO PLYWOOD OR O.S.B. BOARD WITH 16 GA X 7/16" WIDTH CROWN STAPLE 5/8" MIN LENGTH @ 12" O.C. SOLID VINYL SOFFIT MEETS REQUIREMENTS OF THE 8TH EDITION OF THE 2023 F.R.B.C.

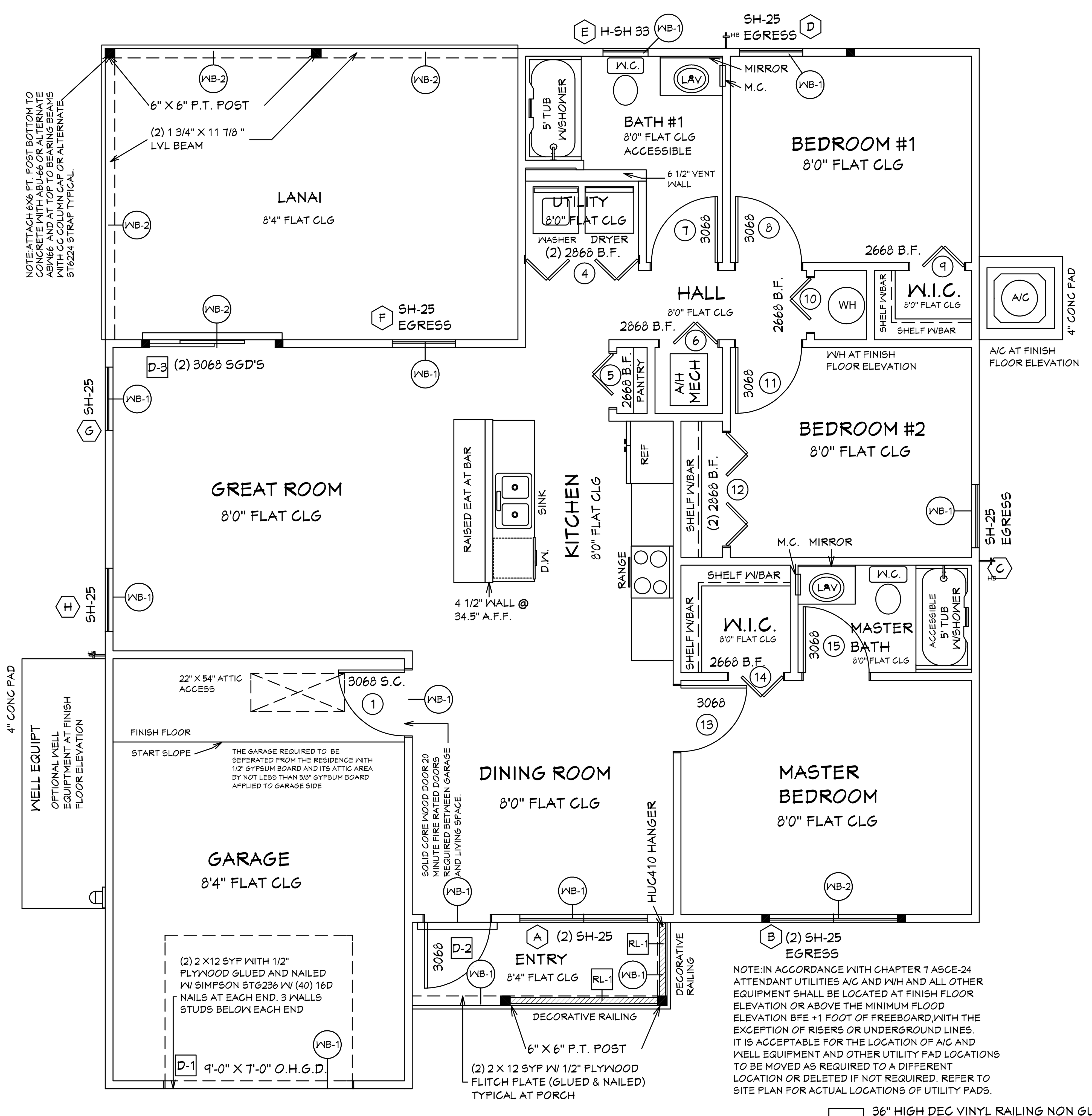


NOTE:IN ACCORDANCE WITH CHAPTER 7 ASCE-24 ATTENDANT UTILITIES A/C AND W/H AND ALL OTHER EQUIPMENT SHALL BE LOCATED AT FINISH FLOOR ELEVATION OR ABOVE THE MINIMUM FLOOD ELEVATION BFE +1 FOOT OF FREEBOARD,WITH THE EXCEPTION OF RISERS OR UNDERGROUND LINES. IT IS ACCEPTABLE FOR THE LOCATION OF A/C AND WELL EQUIPMENT AND OTHER UTILITY PAD LOCATIONS TO BE MOVED AS REQUIRED TO A DIFFERENT LOCATION OR DELETED IF NOT REQUIRED. REFER TO SITE PLAN FOR ACTUAL LOCATIONS OF UTILITY PADS.

RL-1 36" HIGH DEC VINYL RAILING NON GUARDRAIL. OPENING WILL RESIST 4" SPHERE. ATTACH PER MANUFACTURES SPECIFICATIONS.

(2) 1 3/4 X 11 7/8 MICROLAM W/ SIMPSON ST6236 W/ (40) 16D NAILS AT WALL END. 3 WALLS STUDS BELOW EACH END

NOTE: ALL EXTERIOR WALLS ARE 3 1/2" WIDE WOOD WALLS WITH 15/32" PLYWOOD EXTERIOR AND 1/2" DRYWALL INSIDE (4 1/2" TOTAL.) UNLESS NOTED DIFFERENT.
NOTE: ALL INTERIOR WALLS ARE 4 1/2" AND 6 1/2" WIDE WOOD WALLS. UNLESS NOTED DIFFERENT.
CONTRACTOR IS RESPONSIBLE FOR VERIFYING ROUGH OPENINGS AND SIZES OF ALL DOORS AND WINDOWS BEFORE STARTING CONSTRUCTION.

NOTE:ATTACH 6X6 PT. POST BOTTOM TO CONCRETE WITH ABU-66 OR ALTERNATE ABW66 AND AT TOP TO BEARING BEAMS WITH CC COLUMN CAP OR ALTERNATE ST6224 STRAP TYPICAL.

WB-1 =(2) 2 X 12 SYP WITH 1/2" PLYWOOD FLITCH PLATES.GLUED AND NAILED
WB-2 =(2) 1 3/4" X 11 7/8" LVL BEAMS

# NOTED FLOOR PLAN

MASTERED PLAN
CAPE CORAL BUILDING DIVISION
BY: MK_ DATE: 11/07/2024
ALL CONSTRUCTION SHALL BE IN COMPLIANCE WITH THE FLORIDA BUILDING CODE, ALL STATE AND LOCAL CODES. THE GRANTING OF A PERMIT DOES NOT RELIEVE THE CONTRACTOR OF RESPONSIBILTY TO COMPLY WITH ALL CODES AND ORDINANCES.

105.4.1Permit intent.
A permit issued shall be construed to be a license to proceed with the work and not as authority to violate, cancel, alter or set aside any of the provisions of the technical codes, nor shall issuance of a permit prevent the building official from thereafter requiring a correction of errors in plans, construction or violations of this code. Every permit issued shall become invalid unless the work authorized by such permit is commenced within 6 months after its issuance, or if the work authorized by such permit is suspended or abandoned for a period of 6 months after the time the work is commenced.

## PRODUCT SCHEDULE

160 MPH (ULTIMATE DESIGN) = 124 (NOMINAL DESIGN)
ENCLOSED STRUCTURE

| ROOM NAME | MARK | CALL SIZE | W.O. DOOR SIZE / W.O. WINDOW SIZE (WxH) | DETAIL H J S | ZONE | DESIGN PRES. (PSF) | WINDOW / DOOR PRODUCT APPROVAL DESIGNATION / ENTITY | INSTALLATION NOTES (LIST BELOW) | WIND-BORNE DEBRIS REGION Y / N | TYPE OF WINDBORNE DEBRIS PROTECTION (WHERE APPLICABLE) TYPE GLAZING / COVERING | IMPACT COVERING PRODUCT APPROVAL DESIGNATION / ENTITY (WHERE APPLICABLE) |
|---|---|---|---|---|---|---|---|---|---|---|---|
| | | DOOR SCHEDULE | | | | | | | | | |
| GARAGE | D-1 | 9070 O.H.G.D. | 9'-0" X 7'-0" | PER MFR. | 5 | 24.72/-31.20 | REFER TO PRODUCT APPROVAL SHEETS | 3 | Y | N/A | IMPACT APPROVED WITHOUT GLAZING OR COVERING |
| FOYER | D-2 | 3068 6 PNL | 3'-2" X 6'-9 3/8" | PER MFR. | 5 | 26.40/-34.50 | REFER TO PRODUCT APPROVAL SHEETS | | Y | N/A | IMPACT APPROVED WITHOUT GLAZING OR COVERING |
| KITCHEN | D-3 | (2) 3068 SGD'S | 6'-0 1/2" X 6'-9 3/8" | PER MFR. | 5 | 26.40/-34.50 | REFER TO PRODUCT APPROVAL SHEETS | | Y | GLAZING | N/A |
| | | °WINDOW SCHEDULE | | | | | | | | | |
| DINING ROOM | A | (2) SH-25 | 73 3/4" X 62 3/4" | PER MFR. | 4 | 26.40/-28.74 | REFER TO PRODUCT APPROVAL SHEETS | | Y | COVERING | HURRICANE PANELS REFER TO PRODUCT APPROVAL SHEETS |
| MASTER BEDROOM | B | (2) SH-25 EGRESS | 73 3/4" X 62 3/4" | PER MFR. | 5 | 26.40/-34.50 | REFER TO PRODUCT APPROVAL SHEETS | 1 | Y | COVERING | HURRICANE PANELS REFER TO PRODUCT APPROVAL SHEETS |
| BEDROOM #2 | C | SH-25 EGRESS | 36 1/2" X 62 3/4" | PER MFR. | 4 | 27.66/-30.00 | REFER TO PRODUCT APPROVAL SHEETS | 1 | Y | COVERING | HURRICANE PANELS REFER TO PRODUCT APPROVAL SHEETS |
| BEDROOM#1 | D | SH-25 EGRESS | 36 1/2" X 62 3/4" | PER MFR. | 4 | 27.66/-30.00 | REFER TO PRODUCT APPROVAL SHEETS | 1 | Y | COVERING | HURRICANE PANELS REFER TO PRODUCT APPROVAL SHEETS |
| BATH | E | H-33 SH | 26" X 38 1/8" | PER MFR. | 4 | 27.66/-30.00 | REFER TO PRODUCT APPROVAL SHEETS | 2 | Y | COVERING | HURRICANE PANELS REFER TO PRODUCT APPROVAL SHEETS |
| GREAT ROOM | F | SH-25 | 36 1/2" X 62 3/4" | PER MFR. | 4 | 27.66/-30.00 | REFER TO PRODUCT APPROVAL SHEETS | | Y | COVERING | HURRICANE PANELS REFER TO PRODUCT APPROVAL SHEETS |
| GREAT ROOM | G | SH-25 | 36 1/2" X 62 3/4" | PER MFR. | 5 | 27.66/-37.02 | REFER TO PRODUCT APPROVAL SHEETS | | Y | COVERING | HURRICANE PANELS REFER TO PRODUCT APPROVAL SHEETS |
| GREAT ROOM | H | SH-25 | 36 1/2" X 62 3/4" | PER MFR. | 4 | 27.66/-30.00 | REFER TO PRODUCT APPROVAL SHEETS | | Y | COVERING | HURRICANE PANELS REFER TO PRODUCT APPROVAL SHEETS |

°ROOF COVERING MATERIAL

| °TYPE | °MANUFACTURER | °APPROVED MODEL, STYLE, OR DESIGNATION |
|---|---|---|
| ASPHALT SHINGLES | REFER TO PRODUCT APPROVAL SHEETS | REFER TO PRODUCT APPROVAL SHEETS |

CODE COMPLIANCE:
1. ASPHALT SHINGLES SHALL BE IN COMPLIANCE WITH THE (8TH EDITION ) OF THE 2023 FLORIDA RESIDENTIAL BUILDING CODE. , SEC. R905.2
2. CLAY AND CONCRETE TILES SHALL BE IN COMPLIANCE WITH THE (8TH EDITION) OF THE 2023 FLORIDA RESIDENTIAL BUILDING CODE. , SEC. R905.3
3. METAL ROOFING SHALL BE IN COMPLIANCE WITH THE (8TH EDITION) OF THE 2023 FLORIDA RESIDENTIAL BUILDING CODE. , SEC. R905.10

°IMPACT RESISTANT COVERING MATERIAL

| °TYPE | °MANUFACTURER | °APPROVED MODEL, STYLE, OR DESIGNATION |
|---|---|---|
| HURRICANE PANELS | REFER TO PRODUCT APPROVAL SHEETS | REFER TO PRODUCT APPROVAL SHEETS |

INSTALLATION NOTES:
1. MEANS OF EGRESS
2. TEMPERED WINDOW
3. O.H. GARAGE DOOR

°LEGEND:
Dx = DOOR DESIGNATION
SLx = SKYLITE DESIGNATION
Wx = WINDOW DESIGNATION

°SIZE DESIGNATIONS
W = WIDTH
H = HEIGHT

BUILDER TO VERIFY ALL ROUGH OPENINGS FOR ALL DOORS,SLIDING GLASS DOORS, AND WINDOWS PRIOR TO START OF CONSTRUCTION.

BUILDER TO SUPPLY PRODUCT APPROVAL

WINDOWS SHGC=
REFER TO ATTACHED ENERGY CALCULATIONS AND ATTACHED INFORMATION FROM WINDOW AND DOOR COMPANY.

CAPE PALM 1 3/2/1 MODEL / LEFT HAND GARAGE / MONO FOOTER / 2023 CODE / 10 1/2" CANT

10-05-2024 REVISIONS


HICKS DRAFTING & DESIGN
4216 5TH STREET W
LEHIGH ACRES,FL. 33971
CELL:(239)462 -2734
E-MAIL:DHICKS928@AOL.COM


BUILDER: HABITAT FOR HUMANITY
3 BEDROOM 2 BATH HOME /160 MPH WIND LOADING
NEW HOUSE FOR:
LOT- /BLOCK- /UNIT- /SECTION-
TOWNSHIP- SOUTH/RANGE- EAST
STRAP#
ADDRESS:
ADDRESS:

DRAWN BY
DAVID HICKS

DATE: 03-29-2021

SCALE:1/4"=1'0"

JOB # 2024-048

SHEET
6 OF 10 SHEET

**NEC Standard Electrical Load Calculation for Single Family Dwellings**

**(Only for Service Ratings of 120/240V, 225 Amps Max)**

Owner:Habitat for Humanity (Cape Palm 1)

Location: Cape Coral

Total Floor Area of Dwelling (NEC 220.12) 1311 SQ.FT.

| Factor | Quantity | Volt Amperes (VA) |
|---|---|---|
| **"General Lighting"** | | |
| 1. General Lighting (SQFT X 3 VA/SQ FT (Table 220.12) | 3 X 1311 sqft. | 3933 |
| 2. Small Appliance Circuits (1500 VA per circuit) (NEC 220.52(A)) (minimum 2) | 1500 X 2 | 3000 |
| 3. Laundry Circuit (1500 VA per circuit) (NEC 220.52(B)) | 1500 X 1 | 1500 |
| 4. Total General Lighting Load (Add lines 1, 2 & 3): | | 8433 |
| 5. First 3000 VA @ 100%: | | 3000 |
| 6. Total General Lighting Load 8433– 3000 = 5433 @ 35%= | | 1901 |
| 7. **Net General Lighting Load** (Per NEC 220.42) **(Add lines 5 & 6):** | | **4901** |
| | | |
| ***Fixed Appliances(if insufficient space, use back):** | YES / NO | |
| · Garbage Disposal | X | |
| · Bathroom Fan | X | 50 |
| · Kitchen Hood | X | 240 |
| · Dishwasher | X | 1800 |
| 14. Other: 5 hp 240V well Pump | X | 3730 |
| 15. Other:120V Water Softener | X | 1500 |
| | **Total** | **7320** |
| 8. 3 or less Appliances, Total Appliance VA; 4 or more Appliances, 75% of Total Appliance VA (NEC 220.53): | | Does not apply to 2020 code |
| | | |

BLDMP24-000042

| *Other Loads (including motors, EV charger(s), etc.) | YES | NO | Nameplate Rating (VA) |
|---|---|---|---|
| 9. Electric Range (8000VA or Nameplate)** | X | | 8000 |
| 10. HVAC | X | | 5000 |
| 11. Refrigerator | X | | 800 |
| 12. Electric Dryer (5000 VA minimum)** | X | | 5000 |
| 13. Electric Vehicle Charger | | X | |
| 14. Other: | | | |
| 15. Other: | | | |
| 16. 25% of largest motor (NEC 430.24) | | | N/A |
| **Total** | | | **18,800** |
| **Total Service Load Volt-Amperes (VA) (Add lines 7, 8 & 9 thru 16) =31,021** | | | |
| **Total Service Load Volt-Amperes / 240-volts = 129 Amperes** | | | |
| | | | |
| | | | |

**REVIEWED FOR ELECTRICAL COMPLIANCE FOR THE CAPE CORAL BUILDING DIVISION**
**BY: CG DATE: 11/07/2024**
ALL ELECTRICAL INSTALLATIONS SHALL BE IN COMPLIANCE WITH THE FLORIDA BUILDING CODE, STATE, LOCAL, AND NEC CODES. THE GRANTING OF THIS PERMIT DOES NOT RELIEVE THE CONTRACTOR OF THE RESPONSIBILITY TO COMPLY WITH CODES AND ORDINANCE

105.4.1Permit intent:
A permit issued shall be construed to be a license to proceed with the work and not as authority to violate, cancel, alter or set aside any of the provisions of the technical codes, nor shall issuance of a permit prevent the building official from thereafter requiring a correction of errors in plans, construction or violations of this code. Every permit issued shall become invalid unless the work authorized by such permit is commenced within 6 months after its issuance, or if the work authorized by such permit is suspended or abandoned for a period of 6 months after the time the work is commenced.

BLDMP24-000042

6

ART 300. Wiring methods and materials. I am writing to inform you of the use of Nonmetallic Sheathed Cable (NM), commonly known as Romex, alongside nonmetallic (plastic) boxes for a residential electrical installation in a Sugar Palm 1 & 2. As per the 2023 Florida Building Code - Residential, and the 2020 National Electric Code the following considerations ensure compliance with all relevant safety and installation standards:

Wiring Method: 1. Nonmetallic Sheathed Cable (NM) - Romex ● Application: NM cable will be used for general residential branch circuits. ● Installation Requirements: The cable will be secured and supported every 4 and ½ feet and will be installed at least 1 ¼ inches from the edge of framing members, or will be protected physically.

. Box Installation: 2. Nonmetallic Boxes: ● Compliance: Nonmetallic boxes will be used exclusively with cabled wiring methods, ensuring that all sheaths and flexible cords are nonmetallic. ● Securing the Cable: Where nonmetallic-sheathed cable is used, the cable will be fastened within 12 inches of the box, with the sheath extending through a cable knockout or box by at least ¼ inch. ● Flush Installation: All nonmetallic boxes installed in walls or ceilings will be flush with the finished surface

Additionally, the installation will include the following: ● Protection from Physical Damage: Where cables are subject to physical damage, they will be enclosed in conduits such as rigid metal conduit or Schedule 80 PVC, extending at least 6 inches above the floor if passing through

Adhering to the 2023 Florida Building Code and 2020 National Electric Code - Residential, we ensure that all safety and installation guidelines are strictly followed, providing a secure and compliant electrical system for the residence.

John Miller Eddy Electric LLC 239-265-8947 John@eddyelectric.net License #ES1200232

GENERAL NOTES

1. CONTRACTOR TO VERIFY ALL DIMENSIONS PRIOR TO START OF CONSTRUCTION.DIMENSIONS TAKE PRECEDENCE OVER SCALED DIMENSIONS.

2. MASONRY CONTRACTOR TO VERIFY MASONRY OPENING DIMENSIONS FOR ALL WINDOWS,SLIDING GLASS DOORS,& ENTRY DOORS,AS SHOWN ON THESE PLANS,WITH THE DOOR AND WINDOW MANUFACTURER PRIOR TO CONSTRUCTION.

3.IT IS THE CONTRACTORS RESPONSIBILITY TO CHECK THESE PLANS FOR DIMENSIONAL ERRORS,AND/OR OMISSIONS PRIOR TO CONSTRUCTION.IF ANY ERRORS OR OMISSIONS EXIST IN THE DRAWINGS OR SPECIFICATIONS,THE CONTRACTOR SHALL NOTIFY HICKS DRAFTING & DESIGN,IN WRITING,WITHIN 10 DAYS OF REGIEFT OF PLANS,AND PRIOR TO ANY CONSTRUCTION,OR CONTRACTOR ASSUMES ALL THE RESPONSIBILITY FOR THE RESULTS AND ALL THE COSTS OF RECTIFYING THE SAME.

4.HICKS DRAFTING & DESIGN DOES NOT ASSUME ANY RESPONSIBILITY FOR SUPERVISION OF CONSTRUCTION. CONTRACTOR TO ADHERE STRICTLY TO THE (8TH EDITION) OF THE 2023 FLORIDA RESIDENTIAL BUILDING CODE. CHAPTER 3 , AND SECTION 1609 OF THE (8TH EDITION) OF THE 2023 FLORIDA BUILDING CODE. TOGETHER WITH LOCAL AMENDMENTS, AND ALL OTHER APPLICABLE STATE, COUNTY, AND LOCAL STATUES,ORDININANCES, REGULATIONS, AND RULES.

NOTE:MASTER PLANS
FEMA/FLOOD ZONES CONSTRUCTION
NEW CONSTRUCTION OF ANY RESIDENTIAL STRUCTURE SHALL HAVE THE LOWEST FLOOR OR CONCRETE SLAB , INCLUDING GARAGE OR BASEMENT AND AC W/H AND ALL EQUIPTMENT, ELEVATED TO FINISH FLOOR ELEV. OR ABOVE THE BASE FLOOD ELEVATION PLUS 1 FOOT. THIS SHALL APPLY TO HOUSES OR MANUFACTURED HOMES THAT ARE TO BE PLACED OR SUBSTANIALLY IMPROVED ON SITES IN A NEW MANUFACTURED HOME PARK OR SUBDIVISION LCD CHAPTER 6 ,ARTICLE IV FLOOD HAZARD REDUCTION.

THIS RESIDENCE MAY NOT BE BUILT WITHIN 8'0" OF ANOTHER STRUCTURE OR 9'0" FROM ANY PROPERTY LINE PER SECTION R302.1(1) (INCLUDING OVERHANGS)


Alfred Quattrone
Digitally signed by Alfred Quattrone
Date: 2024-10-07 16:49:01
Al Quattrone, Professional Engineer, State of Florida, License No. 52741
This item has been digitally signed and sealed by Al Quattrone, PE, on 10/7/2024.
Printed copies of this document are not considered signed and sealed and the signature must be verified on any electronic copies.
10-05-2024

Quattrone & Associates, Inc.
Engineers, Planners, & Development Consultants
4301 Veronica Shoemaker Blvd. Fort Myers, FL 33916 (239) 936-5222 QAInc.net
Certificate of Authorization Number: 4865
AL QUATTRONE P.E. # 52741


COMPLIANCE STATEMENT
THESE PLANS HAVE BEEN DESIGNED BY A REGISTERED PROFESSIONAL ENGINEER AND THE DESIGN PARAMETERS FOR THE (8TH EDITION) OF TH 2023 FLORIDA RESIDENTIAL BUILDING CODE. CHAPTER 3 IN GENERAL AN SECTION 1609 OF THE (8TH EDITION) OF THE 2023 FLORIDA BUILDING CODE.

REVISIONS:
08-08-2024
10-05-2024

# ELECTRICAL LOAD CALCULATIONS

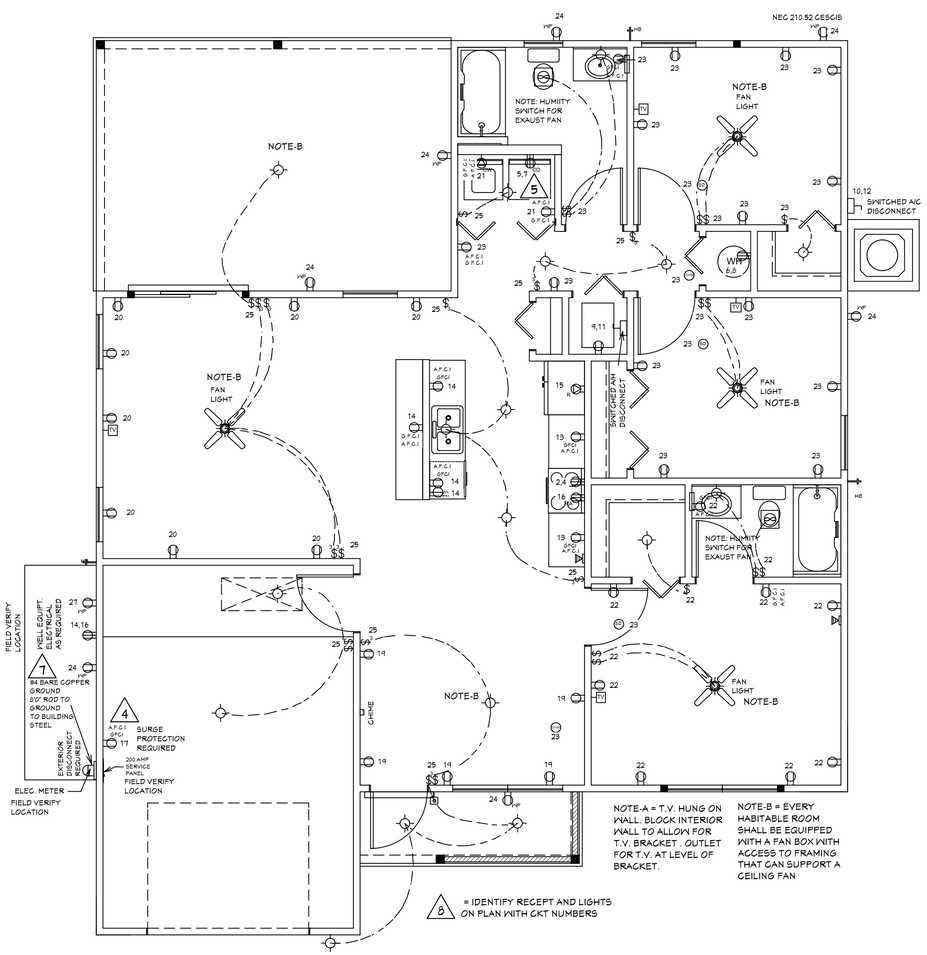


NOTE-A = T.V. HUNG ON WALL. BLOCK INTERIOR WALL TO ALLOW FOR T.V. BRACKET . OUTLET FOR T.V. AT LEVEL OF BRACKET.

NOTE-B = EVERY HABITABLE ROOM SHALL BE EQUIPPED WITH A FAN BOX WITH ACCESS TO FRAMING THAT CAN SUPPORT A CEILING FAN

# ELECTRICAL PLAN

## ELECTRICAL LEGEND

| SYMBOL | DESCRIPTION |
|---|---|
| AV Control | Audio Video: Control Panel, Switch |
| | DENOTES WALL OUTLET TAMPER RESISTENT |
| GFCI | DENOTES GFCI WALL OUTLET |
| WP | DENOTES WATER PROOF WALL OUTLET |
| | DENOTES 220 VOLT WALL OUTLET |
| | DENOTES FLOOR OUTLET |
| | DENOTES COVERED FLOOR OUTLET |
| TV | DENOTES T.V OUTLET |
| | DENOTES DOOR BELL |
| | DENOTES PHONE OUTLET |
| T | DENOTES THEMOSTAT |
| | DENOTES 200 AMP SERVICE BOX |
| | DENOTES WALL SWITCH |
| 3 | DENOTES 3 WAY SWITCH |
| 4 | DENOTES 4 WAY SWITCH |
| 5 | DENOTES 5 WAY SWITCH |
| DM | DENOTES DIMMER SWITCH |
| WP | DENOTES WATER PROOF SWITCH |
| | DENOTES CEILING OR WALL FIXTURE |
| | DENOTES FLOOD LIGHTS |
| R | DENOTES RECESS FIXTURE |
| | DENOTES FLOR LIGHT |
| EF | DENOTES EXHAUST FAN |
| SD | DENOTES SMOKE DETECTOR |
| COMBO | DENOTES SMOKE DETECTOR CARBON MONOXIDE ALARM COMBO |
| | DENOTES JUNCTION BOX & COVER FOR FUTURE FAN |
| J | DENOTES JUNCTION BOX W/COVER |
| Z | DENOTES ZENFLEX LOW VOLTAGE LIGHTING SYSTEM |
| CS / CS/TV | Wall Jacks: CAT5, CAT5 + TV, TV/Cable |
| | Intercom |
| SP SP | Speakers: Ceiling Mounted, Wall Mounted |
| | 240V Receptacle |
| T | Thermostat |
| | Wall Mounted Light Fixtures: Flush Mounted, Wall Sconce |
| | Chandelier Light Fixture |

°NOTE:ALL BRANCH CIRCUITS THAT SUPPLY 125-250 VOLT,SINGLE PHASE, 15 AND 20 AMPERE RECEPTACLE OUTLETS SHALL BE INSTALLED IN ALL ROOMS (INCLUDING BEDROOMS) EXCEPT THE BATHROOMS,UTILITY ROOM IN A DWELLING UNIT AND SHALL BE PROTECTED BY AN ARC-FAULT CIRCUIT INTERRUPTER(S). KITCHEN,BATHROOMS,UTILTY ROOM,AND WET AREA'S SHALL BE PROTECTED BY G.F.C.I. OUTLETS.

= IDENTIFY RECEPT AND LIGHTS ON PLAN WITH CKT NUMBERS

| | | | | |
|---|---|---|---|---|
| SURGE | 1 | 2 | 40A | RANGE |
| SURGE | 3 | 4 | 40A | RANGE |
| DRYER 30A | 5 | 6 | 30A | WATER HEATER |
| DRYER 30A | 7 | 8 | 30A | WATER HEATER |
| AIR HANDLER 20A | 9 | 10 | 20A | AIR CONDENSOR |
| AIR HANDLER 20A | 11 | 12 | 20A | AIR CONDENSOR |
| KITCHEN CKT 1 20A | 13 | 14 | 20A | KITCHEN CKT 2 |
| REFRIDGERATOR 20A | 15 | 16 | 20A | RANGE HOOD |
| GARAGE RECEPT 20A | 17 | 18 | 20A | BATH OUTLETS |
| DINING ROOM RECEPTS 20A | 19 | 20 | 15A | LIVING ROOM |
| LAUNDRY 20A | 21 | 22 | 15A | MASTER BED & BATH |
| BEDROOM 2 & 3 & BATH 15A | 23 | 24 | 15A | OUTSIDE RECEPTS |
| GENERAL LIGHTING 15A | 25 | 26 | 20A | OPTIONAL WELL 240V |
| OPTIONAL WELL 120V 20A | 27 | 28 | 20A | OPTIONAL WELL 240V |
| SPARE | 29 | 30 | | SPARE |

AIR HANDLER UNIT : 5 KW , 30 AMPS
AIR CONDENSER UNIT : 2 TONS , 20 AMPS

PANEL A
200 AMP - MAIN CIRCUIT BREAKER - 120 / 240V - 1 PHASE
30 CIRCUIT - SUFFACE MOUNTED - ( INDOOR )
PANELBOARD

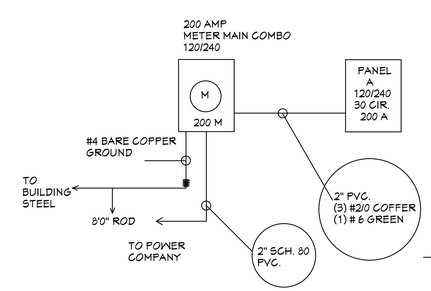


LOW VOLTAGE BONDING BRIDGE AS REQUIRED BY NEC 250.94

ELEC. RISER DIAGRAM 1

CAPE PALM 1 3/2/1 MODEL / LEFT HAND GARAGE / MONO FOOTER / 2023 CODE / 10 1/2" CANT

10-05-2024 REVISIONS


HICKS DRAFTING & DESIGN
4216 5TH STREET W
LEHIGH ACRES,FL. 33971
CELL:(239)462 -2734
E-MAIL:DHICKS928@AOL.COM


BUILDER: HABITAT FOR HUMANITY
3 BEDROOM 2 BATH HOME /160 MPH WIND LOADING
NEW HOUSE FOR:
LOT- /BLOCK- /UNIT- /SECTION-
TOWNSHIP- SOUTH/RANGE- EAST
STRAP#
ADDRESS:
ADDRESS:

DRAWN BY
DAVID HICKS

DATE: 03-29-2021

SCALE:1/4"=1'0"

JOB # 2024-048

SHEET
7 OF 10 SHEET

BLDMP24-000042

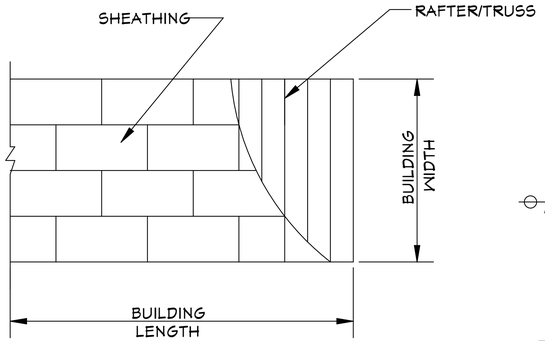


ROOF SHEATHING LAYOUT FOR HIP ROOFS

°N.T.S.

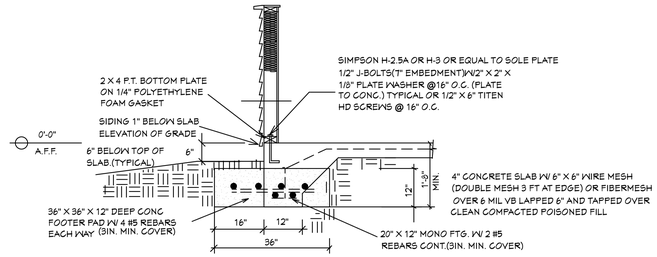


TYPICAL CONC PAD FOOTER DETAIL

SCALE: N.T.S.

NOTE: ADD BLOCKING AS REQUIRED FOR HANDI CAP GRAB BARS IN ALL MODELS.VERIFY LOCATIONS OF BLOCKING BEFORE START OF CONSTRUCTION.

GENERAL NOTES

1. CONTRACTOR TO VERIFY ALL DIMENSIONS PRIOR TO START OF CONSTRUCTION.DIMENSIONS TAKE PREGEDENCE OVER SCALED DIMENSIONS.

2. MASONRY CONTRACTOR TO VERIFY MASONRY OPENING DIMENSIONS FOR ALL WINDOWS,SLIDING GLASS DOORS,& ENTRY DOORS,AS SHOWN ON THESE PLANS,WITH THE DOOR AND WINDOW MANUFACTURER PRIOR TO CONSTRUCTION.

3.IT IS THE CONTRACTORS RESPONSIBILITY TO CHECK THESE PLANS FOR DIMENSIONAL ERRORS,AND/OR OMISSIONS PRIOR TO CONSTRUCTION.IF ANY ERRORS OR OMISSIONS EXIST IN THE DRAWINGS OR SPECIFICATIONS,THE CONTRACTOR SHALL NOTIFY HICKS DRAFTING & DESIGN,IN WRITING,WITHIN 10 DAYS OF RECIEPT OF PLANS,AND PRIOR TO ANY CONSTRUCTION,OR CONTRACTOR ASSUMES ALL THE RESPONSIBILITY FOR THE RESULTS AND ALL THE COSTS OF RECTIFYING THE SAME.

4.HICKS DRAFTING & DESIGN DOES NOT ASSUME ANY RESPONSIBILITY FOR SUPERVISION OF CONSTRUCTION. CONTRACTOR TO ADHERE STRICTLY TO THE (8TH EDITION) OF THE 2023 FLORIDA RESIDENTIAL BUILDING CODE. CHAPTER 3 , AND SECTION 1609 OF THE (8TH EDITION) OF THE 2023 FLORIDA BUILDING CODE. TOGETHER WITH LOCAL AMENDMENTS, AND ALL OTHER APPLICABLE STATE, COUNTY, AND LOCAL STATUES,ORDININANCES, REGULATIONS, AND RULES.

NOTE:MASTER PLANS
FEMA/FLOOD ZONES CONSTRUCTION
NEW CONSTRUCTION OF ANY RESIDENTIAL STRUCTURE SHALL HAVE THE LOWEST FLOOR OR CONCRETE SLAB , INCLUDING GARAGE OR BASEMENT AND A/C W/H AND ALL EQUIPTMENT, ELEVATED TO FINISH FLOOR ELEV. OR ABOVE THE BASE FLOOD ELEVATION PLUS 1 FOOT. THIS SHALL APPLY TO HOUSES OR MANUFACTURED HOMES THAT ARE TO BE PLACED OR SUBSTANIALLY IMPROVED ON SITES IN A NEW MANUFACTURED HOME PARK OR SUBDIVISION LCD CHAPTER 6 ,ARTICLE IV FLOOD HAZARD REDUCTION.

THIS RESIDENCE MAY NOT BE BUILT WITHIN 6'0" OF ANOTHER STRUCTURE OR 5'0" FROM ANY PROPERTY LINE PER SECTION R302.1(1) (INCLUDING OVERHANGS)

Alfred Quattrone
Digitally signed by Alfred Quattrone
Date: 2024-10-07 16:48:48
Al Quattrone, Professional Engineer, State of Florida, License No. 52741
This item has been digitally signed and sealed by Al Quattrone, PE, on 10/7/2024.
Printed copies of this document are not considered signed and sealed and the signature must be verified on any electronic copies.
10-05-2024


Quattrone & Associates, Inc.
Engineers, Planners, & Development Consultants
4301 Veronica Shoemaker Blvd. Fort Myers, FL 33916 (239) 936-5222 QAInc.net
Certificate of Authorization Number: 8865
AL QUATTRONE P.E. # 52741


COMPLIANCE STATEMENT
THESE PLANS HAVE BEEN DESIGNED BY A REGISTERED PROFESSIONAL ENGINEER AND THE DESIGN PARAMETERS FOR THE (8TH EDITION) OF TH 2023 FLORIDA RESIDENTIAL BUILDING CODE. CHAPTER 3 IN GENERAL AN SECTION 1609 OF THE (8TH EDITION) OF THE 2023 FLORIDA BUILDING CODE.

REVISIONS:
08-08-2024
10-05-2024

REVIEWED FOR
MECHANICAL CODE COMPLIANCE
WITH THE CAPE CORAL
BUILDING DIVISION
BY: JM DATE: 10/25/2024
ALL MECHANICAL INSTALLATIONS SHALL BE IN COMPLIANCE WITH THE FLORIDA BUILDING CODE, STATE AND LOCAL CODES. THE GRANTING OF A PERMIT DOES NOT RELIEVE THE CONTRACTOR OF RESPONSIBILITY TO COMPLY WITH ALL CODES AND ORDINANCES.

MASTERED PLAN
CAPE CORAL BUILDING DIVISION
BY: MK_ DATE: 11/07/2024
ALL CONSTRUCTIONS SHALL BE IN COMPLIANCE WITH THE FLORIDA BUILDING CODE, ALL STATE AND LOCAL CODES. THE GRANTING OF A PERMIT DOES NOT RELIEVE THE CONTRACTOR OF RESPONSIBILITY TO COMPLY WITH ALL CODES AND ORDINANCES.

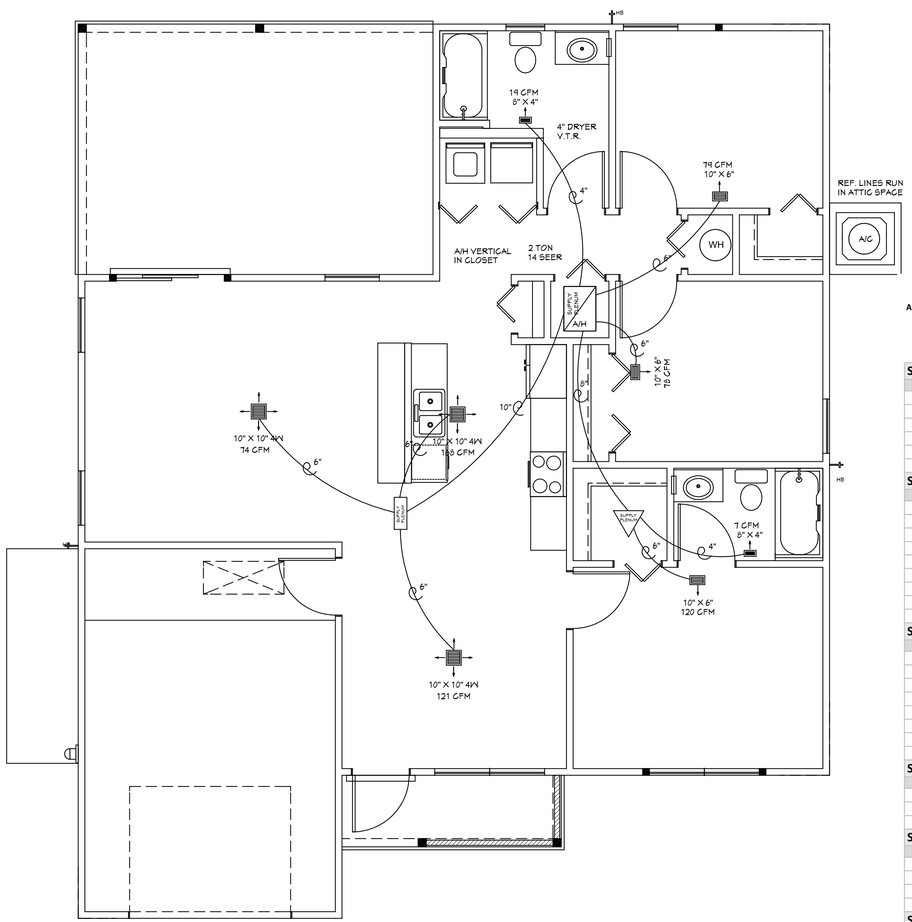


HVAC PLAN

105.4.1Permit intent.
A permit issued shall be construed to be a license to proceed with the work and not as authority to violate, cancel, alter or set aside any of the provisions of the technical codes, nor shall issuance of a permit prevent the building official from thereafter requiring a correction of errors in plans, construction or violations of this code. Every permit issued shall become invalid unless the work authorized by such permit is commenced within 6 months after its issuance, or if the work authorized by such permit is suspended or abandoned for a period of 6 months after the time the work is commenced.

I AL QUATTRONE HAVE REVIEWED AND APPROVE THE PRODUCTS LISTED BELOW FOR USE WITH THIS CAPE PALM 1 MODEL MASTER PLAN

Address: MASTER PLAN Folio Number:

Cape Coral Building

FLORIDA PRODUCT APPROVAL / MIAMI-DADE NOA - INDEX SHEET

1015 Cultural Park Blvd.
Cape Coral, FL 33990
239-574-0546

| Section A: | DOORS | | | | | |
|---|---|---|---|---|---|---|
| # | COMPONENT | MANUFACTURER/MODEL | IMPACT/NON | FL PA/NOA # | Exp. Date | Design Pressure |
| 1 | Swinging | Therma-Tru Corp fiber classic | IMPACT | 20468.1 | 12/31/2026 | +67/-67 |
| 2 | Sliding | CGI Windows and Doors SGD-4025A | NON IMPACT | 29078.1 | 12/31/2032 | +65/-78.3 |
| 3 | Garage | C.H.I. Overhead Doors pan doors | NON IMPACT | 15012.8 | 12/31/2026 | +30/-34.2 |
| 4 | | | | | | |
| 5 | | | | | | |
| 6 | | | | | | |

| Section B: | WINDOWS | | | | | |
|---|---|---|---|---|---|---|
| # | COMPONENT | MANUFACTURER/MODEL | IMPACT/NON | FL PA/NOA # | Exp. Date | Design Pressure |
| 1 | Single Hung | CGI Windows and Doors SH-4000A | NON IMPACT | 23358.1 | 12/31/2032 | +50/-50 |
| 2 | Double Hung | | | | | |
| 3 | Casement | | | | | |
| 4 | Horizontal Slider | | | | | |
| 5 | Mullion | CGI Windows and Doors | IMPACT | 9187.1 | 03/28/2028 | +64.7/-64.7 |
| 6 | Skylights | | | | | |
| 7 | Fixed | | | | | |
| 8 | | | | | | |
| 9 | | | | | | |

| Section C: | ROOFING PRODUCTS | | | | |
|---|---|---|---|---|---|
| # | COMPONENT | MANUFACTURER/MODEL | FL PA/NOA # | Exp. Date | |
| 1 | Asphalt Shingles | GAF Timberline fiberglass 3 TAB | 10124.2 | 12/16/2025 | +N/A /-N/A |
| 2 | Metal | | | | |
| 3 | Tile | | | | |
| 4 | Single Ply | | | | |
| 5 | Underlayment | GAF ROOF UNDERLAYMENT | 10626.2 | 12/28/2026 | +N/A /-442.5 |
| 6 | Vents | GAF COBRA RIDGE VENT | 6267.1 | 07/12/2025 | +N/A / -215.0 |
| 7 | | TAMCO 4'0" OFF RIDGE VENT | 16918.1 | 12/31/2027 | +0 /-52.5 |
| 8 | | | | | |

| Section D: | STORM SHUTTERS | | | | |
|---|---|---|---|---|---|
| # | COMPONENT | MANUFACTURER/MODEL | FL PA/NOA # | Exp. Date | |
| 1 | Storm Panels | Eastern Metal Supply BERTHA GAV STEEL PANELS | 11964.2 | 12/31/2024 | +57/-57 |
| 2 | | | | | |
| 3 | | | | | |

| Section E: | PANEL WALLS | | | | |
|---|---|---|---|---|---|
| # | COMPONENT | MANUFACTURER/MODEL | FL PA/NOA # | Exp. Date | |
| 1 | Soffits | Kaycan LTD D5 | 12198.2 | 12/28/2026 | +55/-35 |
| 2 | Storefront | | | | |
| 3 | | | | | |
| 4 | | | | | |

| Section F: | OTHER | | | | |
|---|---|---|---|---|---|
| # | COMPONENT | MANUFACTURER/MODEL | FL PA/NOA # | Exp. Date | |
| 1 | HURRICANE TIE | SIMPSON H-10A | 10456.7 | 12/31/2026 | |
| 2 | HEAVY TWIST STRAP | SIMPSON HTS20 | 10456.12 | 12-31-2026 | |

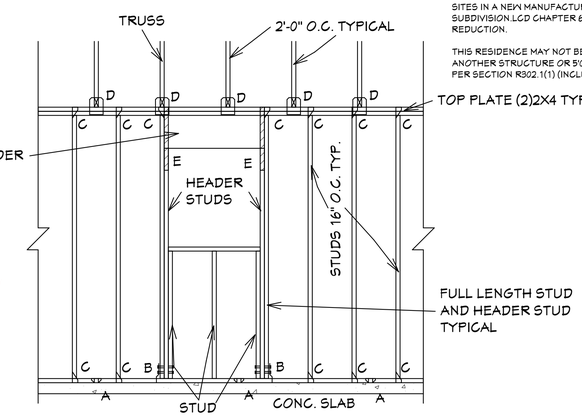


"A" SIMPSON MAS CONNECTOR WITH (6) 10d X 1 1/2" NAILS @ 2'-0" O.C. (PLATE TO SLAB) OR 1/2" J-BOLT (7" MINIMUM EMBEDMENT) AND 2" X 2' X X 1/8" PLATE WASHER @ 16" O.C. OR 1/2" X 6" TITEN HD SCREWS @ 16" O.C.

"B" SIMPSON HD-3B SHEARWALL HOLDOWN W/(2) 5/8" DIA, BOLTS PER STUD AND (1) 5/8" X 6" LONG EXPANSION BOLT

"C" SIMPSON H-2.5A OR H-3 OR EQUAL (STUD TO PLATE)

"D" SIMPSON H10A WITH (18) 10d X 1 1/2" NAILS OR EQUAL (TRUSS TO PLATE)

"E" SIMPSON LSTA-18 WITH (14) 10d NAILS

FRAMING DETAIL (TYP.)

ALL EXTERIOR WALLS ARE SHEARWALLS PER FRAMING DETAIL SHEET 5 OF 7 & EXTERIOR WALL NAILING DETAIL ON SHEET 4 OF 7. SHEAR WALL SECTIONS ARE SHOWN ON SHT 1 OF 7

SCALE:1/2"=1'-0"

1

2

PROVIDE 2"X 4" BLOCKING IN ROOF FRAMING @ ALL UNSUPORTED EDGES OF SHEATHING. ATTACH BLOCKING TO TRUSSES W/ MIN. (3) 12d TOENAILED @ EACH END.

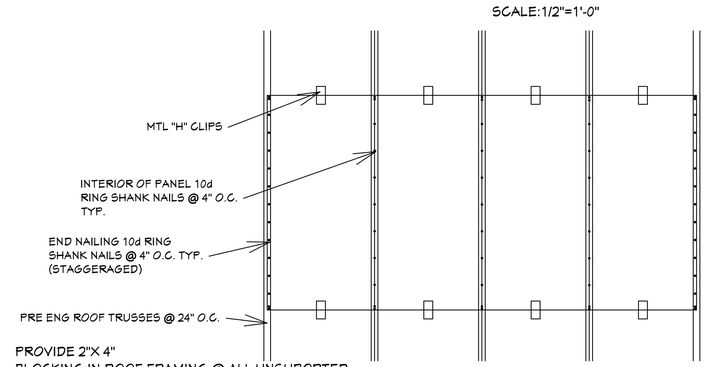


ROOF SHEATHING DETAIL

SCALE:3/4"=1'0"

MASTER PLAN
I AL QUATTRONE APPROVE OF REPETITIVE USE OF PLANS FOR PERMITTING
CAPE PALM 1 3/2/1 MODEL / LEFT HAND GARAGE / MONO FOOTER / 2023 CODE / 10 1/2" CANT

10-05-2024 REVISIONS


HICKS DRAFTING & DESIGN
4216 5TH STREET W
LEHIGH ACRES,FL. 33971
CELL:(239)462 -2734
E-MAIL:DHICKS928@AOL.COM


BUILDER: HABITAT FOR HUMANITY
3 BEDROOM 2 BATH HOME /160 MPH WIND LOADING
NEW HOUSE FOR:
LOT- /BLOCK- /UNIT- /SECTION-
TOWNSHIP- SOUTH/RANGE- EAST
STRAP#
ADDRESS:
ADDRESS:

DRAWN BY
DAVID HICKS

DATE: 03-29-2021

SCALE:1/4"=1'0"

JOB # 2024-048

SHEET
8 OF 10 SHEET

BLDMP24-000042

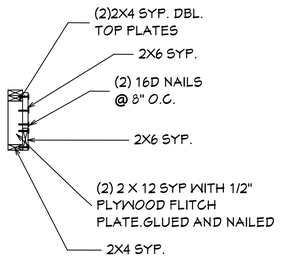


RR SECTION

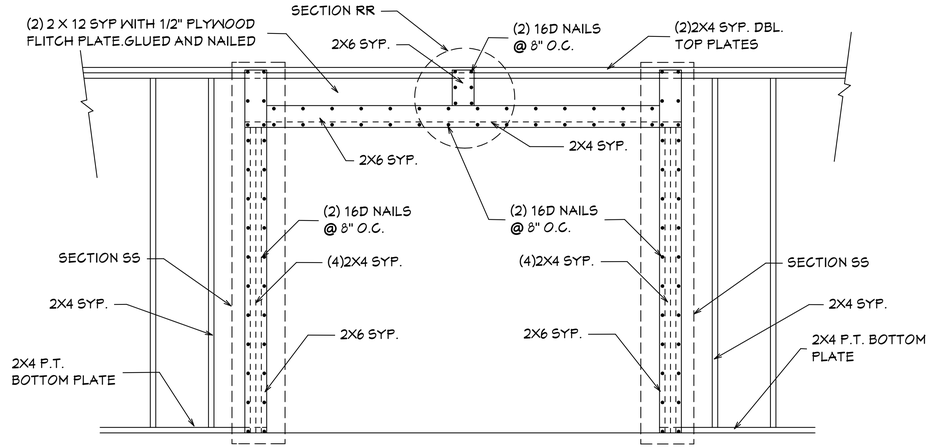


QQ OVERHEAD GARAGE DOOR BUCKING DETAIL

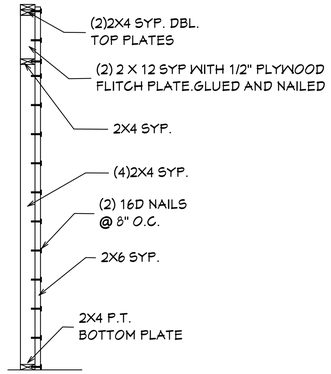


SS SECTION

GENERAL NOTES

1. CONTRACTOR TO VERIFY ALL DIMENSIONS PRIOR TO START OF CONSTRUCTION.DIMENSIONS TAKE PREGEDENCE OVER SCALED DIMENSIONS.

2. MASONRY CONTRACTOR TO VERIFY MASONRY OPENING DIMENSIONS FOR ALL WINDOWS,SLIDING GLASS DOORS,& ENTRY DOORS,AS SHOWN ON THESE PLANS,WITH THE DOOR AND WINDOW MANUFACTURER PRIOR TO CONSTRUCTION.

3.IT IS THE CONTRACTORS RESPONSIBILITY TO CHECK THESE PLANS FOR DIMENSIONAL ERRORS,AND/OR OMISSIONS PRIOR TO CONSTRUCTION.IF ANY ERRORS OR OMISSIONS EXIST IN THE DRAWINGS OR SPECIFICATIONS,THE CONTRACTOR SHALL NOTIFY HICKS DRAFTING & DESIGN,IN WRITING,WITHIN 10 DAYS OF RECIEPT OF PLANS,AND PRIOR TO ANY CONSTRUCTION,OR CONTRACTOR ASSUMES ALL THE RESPONSIBILITY FOR THE RESULTS AND ALL THE COSTS OF RECTIFYING THE SAME.

4.HICKS DRAFTING & DESIGN DOES NOT ASSUME ANY RESPONSIBILITY FOR SUPERVISION OF CONSTRUCTION. CONTRACTOR TO ADHERE STRICTLY TO THE (8TH EDITION) OF THE 2023 FLORIDA RESIDENTIAL BUILDING CODE. CHAPTER 3 , AND SECTION 1609 OF THE (8TH EDITION) OF THE 2023 FLORIDA BUILDING CODE. TOGETHER WITH LOCAL AMENDMENTS, AND ALL OTHER APPLICABLE STATE, COUNTY, AND LOCAL STATUES,ORDININANCES, REGULATIONS, AND RULES.

NOTE:MASTER PLANS
FEMAFLOOD ZONES CONSTRUCTION
NEW CONSTRUCTION OF ANY RESIDENTIAL STRUCTURE SHALL HAVE THE LOWEST FLOOR OR CONCRETE SLAB , INCLUDING GARAGE OR BASEMENT AND A/C W/H AND ALL EQUIPTMENT, ELEVATED TO FINISH FLOOR ELEV. OR ABOVE THE BASE FLOOD ELEVATION PLUS 1 FOOT. THIS SHALL APPLY TO HOUSES OR MANUFACTURED HOMES THAT ARE TO BE PLACED OR SUBSTANTIALLY IMPROVED ON SITES IN A NEW MANUFACTURED HOME PARK OR SUBDIVISION LCD CHAPTER 6 ,ARTICLE IV FLOOD HAZARD REDUCTION.

THIS RESIDENCE MAY NOT BE BUILT WITHIN 6'0" OF ANOTHER STRUCTURE OR 5'0" FROM ANY PROPERTY LINE PER SECTION R302.1(1) (INCLUDING OVERHANGS)

Alfred Quattrone
Digitally signed by Alfred Quattrone
Date: 2024-10-05 16:48:37
Al Quattrone, Professional Engineer, State of Florida, License No. 52741
This item has been digitally signed and sealed by Al Quattrone, PE, on 10/7/2024.
Printed copies of this document are not considered signed and sealed and the signature must be verified on any electronic copies.
10-05-2024


Quattrone & Associates, Inc.
Engineers, Planners, & Development Consultants
4301 Veronica Shoemaker Blvd. Fort Myers, FL 33916 (239) 936-5222 Qalinc.net
Certificate of Authorization Number: 9865
AL QUATTRONE P.E. # 52741


COMPLIANCE STATEMENT
THESE PLANS HAVE BEEN DESIGNED BY A REGISTERED PROFESSIONAL ENGINEER AND THE DESIGN PARAMETERS FOR THE (8TH EDITION) OF TH 2023 FLORIDA RESIDENTIAL BUILDING CODE CHAPTER 3 IN GENERAL AN SECTION 1609 OF THE (8TH EDITION) OF THE 2023 FLORIDA BUILDING CODE.

REVISIONS:
08-08-2024
10-05-2024

## GENERAL

1. This building/structure has been designed in accordance with the (8TH EDITION) OF THE 2023 Residential Edition of the Florida Building Code.CHAPTER 3 AND SECTION 1609 OF THE 8TH EDITION OF THE 2023 FLORIDA BUILDING CODE for design pressures generated by 3 second gust. design wind velocity of 160 mph,structual calculations, as necessary to confirm compliance with the 8th edition of the 2023 Residential Edition of the Florida Building Code, have been performed.

2. David Hicks, and HICKS DRAFTING & DESIGN have not been retained to provide, nor is responsible for, the field supervision, inspection, or construction administration of this project. The owner, or general contractor is responsible for: field supervision, construction administration, review and approval of all shop drawings, verification on-site of all dimensions and elevations, and strict compliance with these construction documents as approved by Lee County drawn by David Hicks, and reviewed by ENGINEER OF RECORD

3. Exterior glazing shall be impact resistant or protected with an impact resistant covering meeting the requirements of SSTD 12, ASTM 1886 and ASTM E 1996, or Miami-Dade PA201, 202, and 203, meeting the requirements of the Large Missle Test.

4. All windows, doors and other such systems, components and cladding shall be designed in accordance with CHAPTER 3 of the 8TH EDITION OF THE 2023 RESIDENTIAL Edition AND SECTION 1609 of the 8TH EDITION OF THE 2023 Florida Code for design pressures generated by a three second gust design wind velocity of 160 mph. see "Design Parameters" for specific pressures.

5. Contractor shall notify the owner in writing prior to construction of any discrepancy between plans and on-site dimensions and elevations.

## FASTENERS AND CONNECTORS

1. Connectors, anchors, and other fastening devices shall be installed in accordance with the manufacturer's recommendations.
2. Where fasteners are not otherwise indicated, fasteners shall be provided in accordance with the 8th edition of the 2023 RESIDENTIAL Edition of the Florida Building Code
3. Nails, screws, or bolts shall be able to resist the forces specified in the 8th edition of the 2023 residential Florida Building Code, chapter 3
4. Metal plates, connectors, screws, bolts and nails exposed directly to the weather or subject to salt corrosion in coastal areas shall be stainless steel, or hot dipped galvanized, after the fastener or connector is fabricated, to form a zinc coating not less than 1 oz per sq ft. or hot dipped galvanized coated with a minimum of 1.8 oz per sq ft of steel meeting the requirements of ASTM A 90 Triple Spot Test.
5. Unless otherwise stated, sizes given for nails are common wire nails. For example, 8d = 2 1/2 inches long x 0.131 inch diameter. See Table 12.3B, columns 2, 3, and 4 in the National Design Specifications for Wood Construction.

## FOOTINGS AND FOUNDATIONS

### GENERAL

1. All exterior walls, bearing walls, and columns, shall be supported on continuous concrete footings, to support safely the loads imposed as determined from the character of the soil.
2. Refer to standard details for typical foundation details.
3. Concrete shall have a minimum specified compressive strength of 3000 psi at 28 days.
4. Reinforcing Steel shall be minimum Grade 40 and identified in accordance with ASTM A 615, A 616, A 617, or A 706.
5. Minimum concrete cover over reinforcing bars shall be 3 inches. In narrow footings where there is insufficient concrete cover to accommodate a standard 90 degree hook, the hook shall be rotated in the horizontal direction until the required concrete cover is achieved.
6. All concrete is to be mixed, transported, and placed in accordance with the latest ACI Specifications and Recommendations.
7. Foundations have been designed for an allowable soil bearing pressure of 2,000 PSF,
8. Provide granular fill, clay materials are unacceptable. Existing Soil under footing and slabs shall be compacted to 95% of AASHTO T-99.
9. Fill shall be placed and compacted in one foot lifts.

## CONCRETE FLOORS

1. Concrete floors shall be cast in place.
2. Concrete shall have a minimum compressive strength of not less than 3,000 psi at 28 days.
3. The top of a monolithic slab-on-grade shall be at least 8 inches above finished grade.
4. The slab shall be 4 inches thick.
5. The slab shall have 6x6 W2.9 x W2.9 welded wire fabric at mid-height
6. A double layer of welded wire fabric shall be provided around the perimeter of the slab of a distance of 3 ft. from the edge. See Standard Details.
7. Welded wire fabric shall conform to ASTM A-185 and free of oil and rust. It shall be installed in lengths as long as possible lapped a minimum of six inches.

## WOOD

### GENERAL

1. All wood construction shall comply with the latest NFPA and AITC Specifications and Recommendations.
2. Lumber standard shall be American Softwood Lumber Standard PS 20-70, S4S, 19% moisture or as required by structural design.
3. Structural lumber (headers, columns, exterior wall studs) to be Southern Pine No. 2 KD 15 with a Fb=1,300 PSI E=1,600,000 PSI, and Fv = 95 PSI.
4. Glue laminated timber shall conform with ASTM D-3737 and AITC 117. Roof beams shall be designated 24F-V1 or 24F-E1.
5. Plywood for sheathing shall be APA rated sheathing as per plans and shall bear the APA Mark.
6. Wood in contact with concrete, masonry and/or exposed to weather shall be protected or pressure treated in accordance with AITC-109.

### EXTERIOR WALL FRAMING

1. Studs shall be placed with the wide face perpendicular to the wall.
2. Header Beams shall be provided and fixed in accordance with CHAPTER 6 of the 8th edition of the 2023 ResidentiaL Florida Building Code.
3. The minimum number of header studs supporting each end of a header beam shall be 1.
4. The minimum number of full-length wall studs at each end of a header beam shall be 1 for openings of 6 feet or less, and 2 for all other openings.
5. Uplift connectors shall be provided at the top and bottom of cripple studs, of header studs, and at least one wall stud at each side of opening.

### CONNECTIONS FOR EXTERIOR WALL FRAMING

1. Framing members in exterior wall systems shall be fastened together in accordance with the 8th edition of the 2023 RESIDENTIAL Edition of the Florida Building Code.
2. Uplift connectors shall be provided to resist the uplift loads.
3. Uplift load resistance shall be continuous from roof to foundation.
4. Studs shall be connected to plates and plates to floor framing with connectors designed, rated, and approved for each individual location and condition.

### EXTERIOR WALLS

1. Exterior wall segments shall not contain openings which when added together will exceed 144 sq in (1 sq ft) in any individual segment.
2. Minimum length of a shearwall segment shall be 2'-5".
3. Studs shall be doubled at each end of each shearwall segment.
4. Joints shall be lap-spliced. Within the center third of a wall length, the minimum lap shall be 4 feet. Lap splices shall be connected with 14 16d common nails.

### WALL SHEATHING

1. Panels shall be 15/32" exposure 1 C-D sheathing grade plywood OR 7/16" OSB 24/16 RATED and shall be installed as follows.

Panels shall be installed with face grain parallel to studs.
All horizontal joints shall occur over framing and shall be attached per Standard Details.
Flatwise blocking shall be used at all horizontal panel joints.
Panels shall be attached to bottom plates and top member of the double top plate.
Lowest plates shall be attached to foundation with bolts or connectors of sufficient capacity to resist the uplift forces developed in the plywood sheathed walls.
Panel attachment to framing shall be as illustrated in the Detail Sheets.
Where windows and doors interrupt plywood sheathing, framing anchors or connectors shall be used to resist the appropriate uplift loads.

### ANCHOR DOWN CONNECTORS

1. Exterior walls require anchor downs to resist overturning moment.
2. Two studs and anchor down are required at each end of each shearwall segment.
3. The anchor down shall be fastened through the doubled studs and to the construction below in accordance with the manufacturer's recommendations.

### ROOF SHEATHING

1. Roof sheathing shall be 19/32 inch Exposure 1 C-D sheathing grade plywood OR 19/32" OSB 40/20 RATED (wood structural panels) or equivalent.
2. The sheathing shall be installed in accordance with Detail Sheets.
3. Long dimension shall be perpendicular to framing and end joints shall be staggered.

I AL QUATTRONE HAVE REVIEWED TRUSS LAYOUT AND THE TRUSS CONNECTOR SCHEDULE BASED ON TRUSS LAYOUT BY RAYMOND BUILDING SUPPLY / RBS # 180T3016M1 / DATED: 01-31-2024 / REVISED UPDATED TO NEW 2023 CODE

| UPLIFT EXCEEDING #1000 | TRUSS IDENTIFICATION | WINDLOAD CONNECTORS |
|---|---|---|
| 1171 | A-12 | HTS-20 |
| 1165 | A-16 | HTS-20 |
| | | |
| | | |
| | | |
| | | |
| | | |
| | | |
| | | |

ALL OTHER TRUSSES:

| | | | |
|---|---|---|---|
| WOOD FRAME | 1000 | H-10 | (16)-8D X 1-1/2 |
| MASONRY | | | |

1. INFORMATION ABOVE FROM TRUSS DESIGN WHICH WAS PREPARED BY RAYMOND BUILDING SUPPLY. FT MYERS, FL.
TRUSS DESIGNATIONS CORRESPOND WITH RAYMOND DOCUMENT.
2. ALL ANCHORS SHOWN AS MFD. BY SIMPSON STRONG TIE OR EQUAL.
3. ALL LOADS IN POUNDS.
4. LOADS NOT SHOWN: LESS THAN 5K GRAVITY AND 1K UPLIFT.

TRUSS FASTENER REQUIREMENTS

MASTERED PLAN
CAPE CORAL BUILDING DIVISION
BY: MK_ DATE: 11/07/2024
ALL CONSTRUCTION SHALL BE IN COMPLIANCE WITH THE FLORIDA BUILDING CODE, ALL STATE AND LOCAL CODES. THE GRANTING OF A PERMIT DOES NOT RELIEVE THE CONTRACTOR OF RESPONSIBILTY TO COMPLY WITH ALL CODES AND ORDINANCES.

105.4.1Permit intent.
A permit issued shall be construed to be a license to proceed with the work and not as authority to violate, cancel, alter or set aside any of the provisions of the technical codes, nor shall issuance of a permit prevent the building official from thereafter requiring a correction of errors in plans, construction or violations of this code. Every permit issued shall become invalid unless the work authorized by such permit is commenced within 6 months after its issuance, or if the work authorized by such permit is suspended or abandoned for a period of 6 months after the time the work is commenced.

ONE WINDOW IN EACH BEDROOM SHALL PROVIDE 5.7 SQ. FT. OF EGRESS AREA MINIMUM CLEAR OPENING 20" W. AND 24" H.

MINIMUM 29" CLEAR OPENING IS REQUIRED FOR ACCESS TO ONE TOILET ROOM PER FLORIDA HANDICAP ACCESSEBILITY REQUIREMENTS.

ALL SMOKE DETECTOR CARBON MONOXIDE ALARM COMBOS TO BE INTERCONNECTED 110 VOLTS A.C.

LIGHTS IN CLOSETS TO COMPLY WITH SECT. 410-8 NEC.

PROVIDE GFI PER NEC 210-8

WATER CONSERVATION FIXTURES REQUIRED ORD#92-36

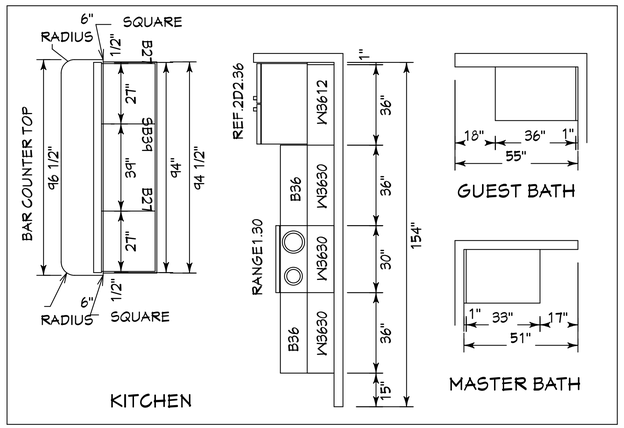


CABINET DRAWINGS
SCALE:3/8"=1'0"

CAPE PALM 1 3/2/1 MODEL / LEFT HAND GARAGE / MONO FOOTER / 2023 CODE / 10 1/2" CANT

10-05-2024 REVISIONS


HICKS DRAFTING & DESIGN
4216 5TH STREET W
LEHIGH ACRES,FL. 33971
CELL:(239)462 -2734
E-MAIL:DHICKS928@AOL.COM


BUILDER: HABITAT FOR HUMANITY
3 BEDROOM 2 BATH HOME /160 MPH WIND LOADING
NEW HOUSE FOR:
LOT- /BLOCK- /UNIT- /SECTION-
TOWNSHIP- SOUTH/RANGE- EAST
STRAP#
ADDRESS:
ADDRESS:

DRAWN BY
DAVID HICKS

DATE: 03-29-2021

SCALE:1/4"=1'0"

JOB # 2024-048

SHEET
9 OF 10 SHEET

BLDMP24-000042

BUILDING OVERHANG TO BE 5 FEET FROM PROPERTY LINE UNLESS RATED OR FIRE SPRINKLERED TABLE R302.1(1)

DECK BOARDS & STAIR TREADS REQUIRED TO HAVE LABEL R507

ONE LAYER OF WATER RESISTIVE BARRIER BEHIND EXTERIOR SIDING WALL COVERING R703.2

TWO LAYERS OF WATER RESISTIVE BARRIER BEHIND EXTERIOR WALLS WITH WIRE LATH & CEMENTITIOUS FINISH COVERING R703.7.3

PAN FLASHING UNDER WINDOWS AND DOORS ON FRAME CONSTRUCTION. REFER TO NOTES R703.4 ON SHEET 10 OF 10

WINDOWS MUST HAVE COMPLIANT SHGC VALUES. REFER TO EXTERIOR OPENING CHART AND ATTACHED ENERGY CALCULATIONS AND WINDOW AND DOOR SPEC SHEETS FROM MANUFACTURES.

WATER HEATERS AND STORAGE TANKS SHALL BE EQUIPT WITH PRESSURE RELEASE AND TEMPERATURE VALVES OR A COMBINATION THEREOF 504 WATER TANK SAFETY DEVISES.

THE MAXIMUN DISTANCE BETWEEN A HOT WATER SUPPLY SOURSE AND ALL FIXTURES SERVED BY THE SUPPLY SOURSE HAS BEN REDUCED FROM 100 FT TO 50 FT. HOT OR TEMPERED WATER SUPPLY TO FIXTURES

SECTIONR806
ROOF VENTILATION
R806.1Ventilation required.
Enclosed attics and enclosed rafter spaces formed where ceilings are applied directly to the underside of roof rafters shall have cross ventilation for each separate space by ventilating openings protected against the entrance of rain or snow. Ventilation openings shall have a least dimension of 1/16 inch (1.6 mm) minimum and 1/4 inch (6.4 mm) maximum. Ventilation openings having a least dimension larger than 1/4 inch (6.4 mm) shall be provided with corrosion-resistant wire cloth screening, hardware cloth, perforated vinyl or similar material with openings having a least dimension of 1/16 inch (1.6 mm) minimum and 1/4 inch (6.4 mm) maximum. Openings in roof framing members shall conform to the requirements of Section R802.7. Required ventilation openings shall open directly to the outside air and shall be protected to prevent the entry of birds, rodents, snakes and other similar creatures.
R806.2Minimum vent area.
The minimum net free ventilating area shall be 1/150 of the area of the vented space.
Exception: The minimum net free ventilation area shall be 1/300 of the vented space, provided that not less than 40 percent and not more than 50 percent of the required ventilating area is provided by ventilators located in the upper portion of the attic or rafter space. Upper ventilators shall be located not more than 3 feet (914 mm) below the ridge or highest point of the space, measured vertically. The balance of the required ventilation provided shall be located in the bottom one-third of the attic space. Where the location of wall or roof framing members conflicts with the installation of upper ventilators, installation more than 3 feet (914 mm) below the ridge or highest point of the space shall be permitted.
R806.3Vent and insulation clearance.
Where eave or cornice vents are installed, blocking, bridging and insulation shall not block the free flow of air. Not less than a 1-inch (25 mm) space shall be provided between the insulation and the roof sheathing and at the location of the vent.
R806.4Installation and weather protection.
Ventilators shall be installed in accordance with manufacturer's instructions. Installation of ventilators in roof systems shall be in accordance with the requirements of Section R903. Installation of ventilators in wall systems shall be in accordance with the requirements of Section R703.1.
R806.5Unvented attic and unvented enclosed rafter assemblies.
Unvented attics and unvented enclosed roof framing assemblies created by ceilings that are applied directly to the underside of the roof framing members and structural roof sheathing applied directly to the top of the roof framing members/rafters, shall be permitted where all the following conditions are met:
1.The unvented attic space is completely within the building thermal envelope.
2.No interior Class I vapor retarders are installed on the ceiling side (attic floor) of the unvented attic assembly or on the ceiling side of the unvented enclosed roof framing assembly.
3.Where wood shingles or shakes are used, a minimum 1/4-inch (6.4 mm) vented airspace separates the shingles or shakes and the roofing underlayment above the structural sheathing.
4.In Climate Zones 5, 6, 7 and 8, any air-impermeable insulation shall be a Class II vapor retarder, or shall have a Class II vapor retarder coating or covering in direct contact with the underside of the insulation.
5.Insulation shall comply with Item 5.3 and Item 5.1. As an alternative, where air-permeable insulation is located on top of the attic floor or on top of the attic ceiling, insulation shall comply with Item 5.3 and Item 5.2.
5.1.Item 5.1.1, 5.1.2, 5.1.3 or 5.1.4 shall be met, depending on the air permeability of the insulation directly under the structural roof sheathing.
5.1.1.Where only air-impermeable insulation is provided, it shall be applied in direct contact with the underside of the structural roof sheathing.
5.1.2.Where air-permeable insulation is provided inside the building thermal envelope, it shall be installed in accordance with Section 5.1.1. In addition to the air-permeable insulation installed directly below the structural sheathing, rigid board or sheet insulation shall be installed directly above the structural roof sheathing in accordance with the R-values in Table R806.5 for condensation control.
5.1.3.Where both air-impermeable and air-permeable insulation are provided, the air-impermeable insulation shall be applied in direct contact with the underside of the structural roof sheathing in accordance with Item 5.1.1 and shall be in accordance with the R-values in Table R806.5 for condensation control. The air-permeable insulation shall be installed directly under the air-impermeable insulation.
5.1.4.Alternatively, sufficient rigid board or sheet insulation shall be installed directly above the structural roof sheathing to maintain the monthly average temperature of the underside of the structural roof sheathing above 45°F (7°C). For calculation purposes, an interior air temperature of 68°F (20°C) is assumed and the exterior air temperature is assumed to be the monthly average outside air temperature of the three coldest months.
5.2.In Climate Zones 1, 2 and 3, air-permeable insulation installed in unvented attics on the top of the attic floor or on top of the ceiling shall meet the following requirements:
5.2.1.An approved vapor diffusion port shall be installed not more than 12 inches (305 mm) from the highest point of the roof, measured vertically from the highest point of the roof to the lower edge of the port.
5.2.2.The port area shall be greater than or equal to 1:600 of the ceiling area. Where there are multiple ports in the attic, the sum of the port areas shall be greater than or equal to the area requirement.
5.2.3.The vapor-permeable membrane in the vapor diffusion port shall have a vapor permeance rating of greater than or equal to 20 perms when tested in accordance with Procedure A of ASTM E96.
5.2.4.The vapor diffusion port shall serve as an air barrier between the attic and the exterior of the building.
5.2.5.The vapor diffusion port shall protect the attic against the entrance of rain and snow.
5.3.Where preformed insulation board is used as the air-impermeable insulation layer, it shall be sealed at the perimeter of each individual sheet interior surface to form a continuous layer.

THE ROOF VENTILATION MUST MEET ALL REQUIREMENTS OF SECTION R806 ROOF VENTILATION SHOWN ABOVE.
R806.2 MINIMUM AREA CALCULATIONS:
THE TOTAL NET FREE VENTILATING AREA SHALL BE NOT LESS THAN 1 TO 300 OF THE AREA OF THE SPACE VENTILATED.
1931 SQ FT TOTAL ATTIC AREA TO BE VENTILATED
1931 SQ FT DIVIDED BY 300 SQ FT = 6.43 SQ FT TOTAL VENTILATION REQUIRED.
CONVERT TO SQ IN:6.43 SQ FT X 144 =925.92 SQ IN.
925.92 SQ IN. DIVIDED INTO=555.55 IN. AT SOFFITS AND 370.36 IN. AT RIDGE VENTS OR OFF RIDGE VENTS SEPERATE OR COMBINED.
(COBRA RIDGE VENT 3 FL#6267 R17) PROVIDES 18 SQ IN. PER LINEAL FT OF NET FREE VENTALATING AREA
(TAMCO 4'0" ROUND OFF RIDGE VENT FL#-16418-R3 PROVIDES 138 SQ IN. PER OFF RIDGE VENT.

370.36 SQ IN. TOTAL UPPER ROOF VENTILATION /414.00 SQ IN SUPPLIED IN UPPER ROOF
TAMCO 4'0" ROUND OFF RIDGE VENT 138 SQ IN PER VENT = 3 REQUIRED =414.00 SQ IN

TOTAL OF VENTED SOFFIT REQUIRED = 555.55 SQ IN.
769.12 SQ IN VENTED SOFFIT SUPPLIED MEETS THE REQUIREMENTS.
FL # 12198.2 KAYCAN LTD VINYL SOFFIT 10" D5
5.17 SQ IN NET FREE AREA PER LINEAL FT

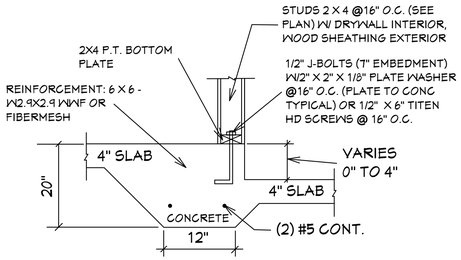


WALL DETAIL

SCALE:1"=1'0"

1/2

TOP PLATE SPLICES SHALL BE LAPPED A MINIMUM OF 4FT. LAP
SPLICES SHALL BE CONNECTED WITH 14 EACH 16d NAILS MINIMUM

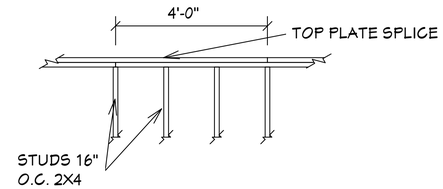


NOTE: SPLICE TO OCCUR OVER STUD IN ALL CASES

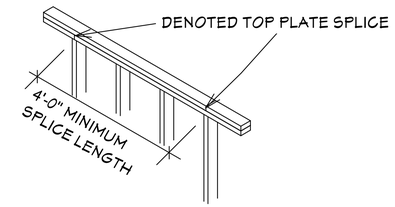


TOP PLATE SPLICE DETAIL

NTS

105.4.1Permit intent.
A permit issued shall be construed to be a license to proceed with the work and not as authority to violate, cancel, alter or set aside any of the provisions of the technical codes, nor shall issuance of a permit prevent the building official from thereafter requiring a correction of errors in plans, construction or violations of this code. Every permit issued shall become invalid unless the work authorized by such permit is commenced within 6 months after its issuance, or if the work authorized by such permit is suspended or abandoned for a period of 6 months after the time the work is commenced.

**MASTERED PLAN**
**CAPE CORAL BUILDING DIVISION**
BY: MK_ DATE: 11/07/2024
ALL CONSTRUCTION SHALL BE IN COMPLIANCE WITH THE FLORIDA BUILDING CODE, ALL STATE AND LOCAL CODES. THE GRANTING OF A PERMIT DOES NOT RELIEVE THE CONTRACTOR OF RESPONSIBILTY TO COMPLY WITH ALL CODES AND ORDINANCES.

GENERAL NOTES
1. CONTRACTOR TO VERIFY ALL DIMENSIONS PRIOR TO START OF CONSTRUCTION.DIMENSIONS TAKE PREGEDENCE OVER SCALED DIMENSIONS.

2. MASONRY CONTRACTOR TO VERIFY MASONRY OPENING DIMENSIONS FOR ALL WINDOWS,SLIDING GLASS DOORS,& ENTRY DOORS,AS SHOWN ON THESE PLANS,WITH THE DOOR AND WINDOW MANUFACTURER PRIOR TO CONSTRUCTION.

3.IT IS THE CONTRACTORS RESPONSIBILITY TO CHECK THESE PLANS FOR DIMENSIONAL ERRORS,AND/OR OMISSIONS PRIOR TO CONSTRUCTION.IF ANY ERRORS OR OMISSIONS EXIST IN THE DRAWINGS OR SPECIFICATIONS,THE CONTRACTOR SHALL NOTIFY HICKS DRAFTING & DESIGN,IN WRITING,WITHIN 10 DAYS OF RECIEPT OF PLANS,AND PRIOR TO ANY CONSTRUCTION,OR CONTRACTOR ASSUMES ALL THE RESPONSIBILITY FOR THE RESULTS AND ALL THE COSTS OF RECTIFYING THE SAME.
4.HICKS DRAFTING & DESIGN DOES NOT ASSUME ANY RESPONSIBILITY FOR SUPERVISION OF CONSTRUCTION. CONTRACTOR TO ADHERE STRICTLY TO THE (8TH EDITION) OF THE 2023 FLORIDA RESIDENTIAL BUILDING CODE. CHAPTER 3 , AND SECTION 1609 OF THE (8TH EDITION) OF THE 2023 FLORIDA BUILDING CODE. TOGETHER WITH LOCAL AMENDMENTS, AND ALL OTHER APPLICABLE STATE, COUNTY, AND LOCAL STATUES,ORDININANCES, REGULATIONS, AND RULES.

NOTE:MASTER PLANS
FEMAFLOOD ZONES CONSTRUCTION
NEW CONSTRUCTION OF ANY RESIDENTIAL STRUCTURE SHALL HAVE THE LOWEST FLOOR OR CONCRETE SLAB , INCLUDING GARAGE OR BASEMENT AND A/C W/H AND ALL EQUIPTMENT, ELEVATED TO FINISH FLOOR ELEV. OR ABOVE THE BASE FLOOD ELEVATION PLUS 1 FOOT. THIS SHALL APPLY TO HOUSES OR MANUFACTURED HOMES THAT ARE TO BE PLACED OR SUBSTANIALLY IMPROVED ON SITES IN A NEW MANUFACTURED HOME PARK OR SUBDIVISION LCD CHAPTER 6 ,ARTICLE IV FLOOD HAZARD REDUCTION.

THIS RESIDENCE MAY NOT BE BUILT WITHIN 6'0" OF ANOTHER STRUCTURE OR 5'0" FROM ANY PROPERTY LINE PER SECTION R302.1(1) (INCLUDING OVERHANGS)

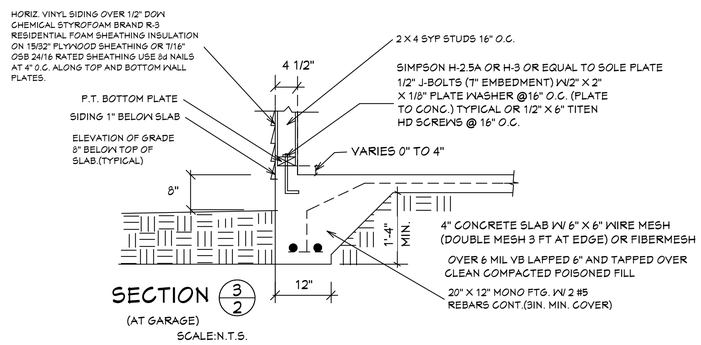


SECTION 3/2
(AT GARAGE)
SCALE:N.T.S.

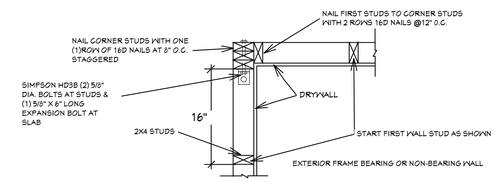


FRAME WALLS INTERSECTION DETAIL

SCALE:1"=1'0"

R703.4 Flashing.
Approved metal flashing, vinyl flashing, self-adhered membranes and mechanically attached flexible flashing sha applied shingle-fashion or in accordance with the manufacturer's instructions. Metal flashing shall be corrosion resistant. Fluid-applied membranes used as flashing shall be applied in accordance with the manufacturer's instructions. All flashing shall be applied in a manner to prevent the entry of water into the wall cavity or penetrati of water to the building structural framing components. Self-adhered membranes used as flashing shall comply with AAMA 711. All exterior fenestration products shall be sealed at the juncture with the building wall with a seal complying with AAMA 800 or ASTM C920 Class 25 Grade NS or greater for proper joint expansion and contraction, ASTM C1281, AAMA 812, or other approved standard as appropriate for the type of sealant. Fluid-applied membranes used as flashing in exterior walls shall comply with AAMA 714. The flashing shall extend to t surface of the exterior wall finish. Approved flashings shall be installed at the following locations:
1.Exterior window and door openings. Flashing at exterior window and door openings shall extend to the surfa of the exterior wall finish or to the water-resistive barrier complying with Section 703.2 for subsequent drainage Mechanically attached flexible flashings shall comply with AAMA 712. Flashing at exterior window and door openings shall be installed in accordance with one or more of the following:
1.1.The fenestration manufacturer's installation and flashing instructions, or for applications not addressed in t fenestration manufacturer's instructions, in accordance with the flashing or water-resistive barrier manufacture instructions. Where flashing instructions or details are not provided, pan flashing shall be installed at the sill of exterior window and door openings. Pan flashing shall be sealed or sloped in such a manner as to direct water the surface of the exterior wall finish or to the water-resistive barrier for subsequent drainage. Openings using flashing shall incorporate flashing or protection at the head and sides.
1.2.In accordance with the flashing design or method of a registered design professional.
1.3.In accordance with other approved methods.
1.4In accordance with FMA/AAMA 100, FMA/AAMA 200, FMA/WDMA 250, FMA/AAMA/WDMA 300 or FMA/AAMA/WDMA 400, or FMA/AAMA/WDMA 2710.
2.At the intersection of chimneys or other masonry construction with frame or stucco walls, with projecting lips both sides under stucco copings.
3.Under and at the ends of masonry, wood or metal copings and sills.
4.Continuously above all projecting wood trim.
5.Where exterior porches, decks or stairs attach to a wall or floor assembly of wood-frame construction.
6.At wall and roof intersections.
7.At built-in gutters.

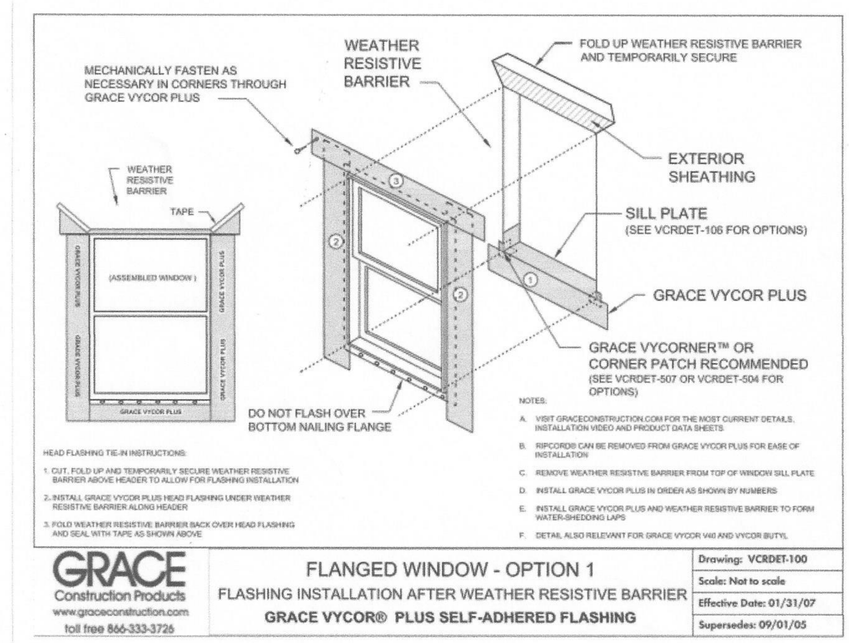


PAN FLASHING UNDER WINDOWS AND DOORS ON FRAME CONSTRUCTION COMPLY WITH AAMA-711 IF SELF ADHEARED MEMBRANES ARE USED AS FLASHING R703.4


Alfred Quattrone
Digitally signed by Alfred Quattrone
Date: 2024-10-07 16:48:24
Al Quattrone, Professional Engineer, State of Florida, License No. 52741
This item has been digitally signed and sealed by Al Quattrone, PE, on 10/7/2024.
Printed copies of this document are not considered signed and sealed and the signature must be verified on any electronic copies.
10-05-2024

Quattrone & Associates, Inc.
Engineers, Planners, & Development Consultants
4301 Veronica Shoemaker Blvd. Fort Myers, FL 33916 (239) 936-5222 Qalinc.net
Certificate of Authorization Number: 4865
AL QUATTRONE P.E. # 52741


COMPLIANCE STATEMENT
THESE PLANS HAVE BEEN DESIGNED BY A REGISTERED PROFESSIONAL ENGINEER AND THE DESIGN PARAMETERS FOR THE (8TH EDITION) OF TH 2023 FLORIDA RESIDENTIAL BUILDING CODE. CHAPTER 3 IN GENERAL AN SECTION 1609 OF THE (8TH EDITION) OF THE 2023 FLORIDA BUILDING CODE.

REVISIONS:
08-08-2024
10-05-2024


HICKS DRAFTING & DESIGN
4216 5TH STREET W
LEHIGH ACRES,FL. 33971
CELL:(239)462 -2734
E-MAIL:DHICKS928@AOL.COM


CAPE PALM 1 3/2/1 MODEL / LEFT HAND GARAGE / MONO FOOTER / 2023 CODE / 10 1/2" CANT

BUILDER: HABITAT FOR HUMANITY
3 BEDROOM 2 BATH HOME /160 MPH WIND LOADING
NEW HOUSE FOR:
LOT- /BLOCK- /UNIT- /SECTION-
TOWNSHIP- SOUTH/RANGE- EAST
STRAP#
ADDRESS:
ADDRESS:

10-05-2024 REVISIONS

DRAWN BY
DAVID HICKS
DATE: 03-29-2021
SCALE:1/4"=1'0"
JOB # 2024-048
SHEET
10 OF 10 SHEET

| CAPE PALM 1 3/2/1/-LHG WALL SCHEDULE | | | | |
|---|---|---|---|---|
| | WALL# | LENGTH | EXTERIOR OR INTERIOR | NOTES |
| | 1 | 11'-11 1/2" | EXTERIOR | 2 X 4 SYP #2 WALL |
| | 2A* | 9'-10" | EXTERIOR | 2 X 4 SYP #2 WALL PLUMBING (WAS 2 X 6) |
| | 3A* | 10'-4" | EXTERIOR | 2 X 4 SYP #2 WALL |
| | 4A* | 14'-0" | EXTERIOR | 2 X 4 SYP #2 WALL |
| | 5 | 9'-2" | EXTERIOR | 2 X 4 SYP #2 WALL |
| | 6 | 14'-11 1/2" | EXTERIOR | 2 X 4 SYP #2 WALL |
| | 7 | 10'-6" | EXTERIOR | 2 X 4 SYP #2 WALL |
| | 8 | 10'-5 1/2" | EXTERIOR | 2 X 4 SYP #2 WALL |
| | 9 | 14'-4 1/2" | EXTERIOR | 2 X 4 SYP #2 WALL |
| | 10 | 8'-0" | EXTERIOR | 2 X 4 SYP #2 WALL |
| | 11 | 12'-7" | EXTERIOR | 2 X 4 SYP #2 WALL |
| | 12 | 14'-7 1/2" | EXTERIOR | 2 X 4 SYP #2 WALL |
| | 13 | 11'-4" | EXTERIOR | 2 X 4 SYP #2 WALL |
| | 14 | 5'-10" | EXTERIOR | 2 X 4 SYP #2 WALL |
| | 15 | 10'-2" | EXTERIOR | 2 X 4 SYP #2 WALL |
| | 16 | 14'-3 1/2" | EXTERIOR | 2 X 4 SYP #2 WALL |
| | | | | |
| 17 | 50 | 11'-8" | INTERIOR | 2 X 4 SPF WALL |
| 19 | 51 | 3'-9" | INTERIOR | 2 X 4 SPF WALL |
| 20 | 52 | 10'-3 1/2" | INTERIOR | 2 X 4 SPF WALL |
| 21 | 53 | 4'-3-1/2" | INTERIOR | 2 X 4 SPF WALL |
| 22 | 54 | 5'-9 1/2" | INTERIOR | 2 X 6 SPF #2 PLUMBING |
| 23 | 55 | 2'-10" | INTERIOR | 2 X 4 SPF WALL (WAS 2 X 6) |
| 24 | 56 | 3'-5" | INTERIOR | 2 X 4 SPF WALL |
| 25 | 57 | 3'-5" | INTERIOR | 2 X 4 SPF WALL |
| 26 | 58 | 11'-8" | INTERIOR | 2 X 4 SPF WALL |
| 28 | 59 | 5'-9" | INTERIOR | 2 X 4 SPF WALL |
| 29 | 60 | 3'-6 1/2" | INTERIOR | 2 X 4 SPF WALL |
| 30 | 61 | 3'-3" | INTERIOR | 2 X 4 SPF WALL |
| 31 | 62 | 5'-2" | INTERIOR | 2 X 4 SPF WALL |
| 32 | 63 | 10'-2" | INTERIOR | 2 X 4 SPF WALL |
| 33 | 64 | 8'-5" | INTERIOR | 2 X 4 SPF #2 PLUMBING (WAS 2 X 6) |
| 34 | 65 | 5'-7 1/2" | INTERIOR | 2 X 4 SPF WALL |
| 35 | 66 | 12'-5 1/2" | INTERIOR | 2 X 4 SPF WALL |
| 36 | 67 | 5'-3" | INTERIOR | 2 X 4 SPF WALL |
| 37 | 68 | 8'-5" | INTERIOR | 2 X 4 SPF WALL |
| 38 | 69 | 5'-7 1/2" | INTERIOR | 2 X 4 SPF WALL |
| 39 | 70 | 11'-4" | INTERIOR | 2 X 4 SPF WALL |
| 40 | 71 | 12'-8" | INTERIOR | 2 X 4 SYP #2 WALL |
| 41 | 72 | 14'-1" | INTERIOR | 2 X 4 SYP #2 WALL |
| 42 | 73 | 7'-10" | INTERIOR | 2 X 4 SPF #2 LOW PLUMBING (WAS 2 X 6) |
| 43 | 74 | | | |
| 44 | 75 | | | |
| 45 | 76 | | | |
| 46 | 77 | | | |
| | 78 | | | |
| | 79 | | | |
| | 80 | | | |

NOTE: ALL DIMENSIONS AS PER BUILDER

| CAPE PALM 1 3/2/1-LHG MODEL LVL BEAM SCHEDULE | | |
|---|---|---|
| BEAM # | LENGTH | BEAM TYPE |
| A | 20'-2" | (2) PLY 1 3/4" X 11 7/8" LVL BEAM |
| B | 14'-4" | (2) PLY 1 3/4" X 11 7/8" LVL BEAM |
| C | 6'-9-1/2" | (2) PLY 1 3/4" X 11 7/8" LVL BEAM |
| D | 6'-10-3/4" | (2) PLY 1 3/4" X 11 7/8" LVL BEAM |

| CAPE PALM 1 3/2/1-LHG MODEL 2 X 12 SYP. BEAM SCHEDULE | | |
|---|---|---|
| BEAM # | LENGTH | BEAM TYPE |
| E | 9'-8" | (2) 2 X 12 SYP. W 1/2" PLYWOOD FLITCH PLATES (GLUED & NAILED) |
| F | 4'-0" | (2) 2 X 12 SYP. W 1/2" PLYWOOD FLITCH PLATES (GLUED & NAILED) |
| G | 12'-7" | (2) 2 X 12 SYP. W 1/2" PLYWOOD FLITCH PLATES (GLUED & NAILED) |
| H | 6'-2" | (2) 2 X 12 SYP. W 1/2" PLYWOOD FLITCH PLATES (GLUED & NAILED) |

R.O. OPENINGS FOR DOORS AND WINDOWS
(2) 3068 EXTERIOR SLIDING GLASS DOORS 72 1/2" X 81 3/8"
3068 EXTERIOR DOOR 38" X 81 3/8"
3068 INTERIOR DOOR 38" X 81"
2068 BI-FOLD DOOR 25 1/2" X 80"
2868 BI-FOLD DOOR 33 1/2" X 80"
3068 BI-FOLD DOOR 37 1/2" X 80"
5068 BI-FOLD DOOR 61 1/2" X 80"
5468 BI-FOLD DOOR 65" X 80"
6068 BI-FOLD DOOR 73 1/2" X 80"
SH-25 SINGLE HUNG WINDOW 36 1/2" X 62 3/4"
(2) SH-25 SINGLE HUNG WINDOW 73 3/4" X 62 3/4"
H-33-SH SINGLE HUNG WINDOW 26" X 38 1/8"

BLDMP24-000042

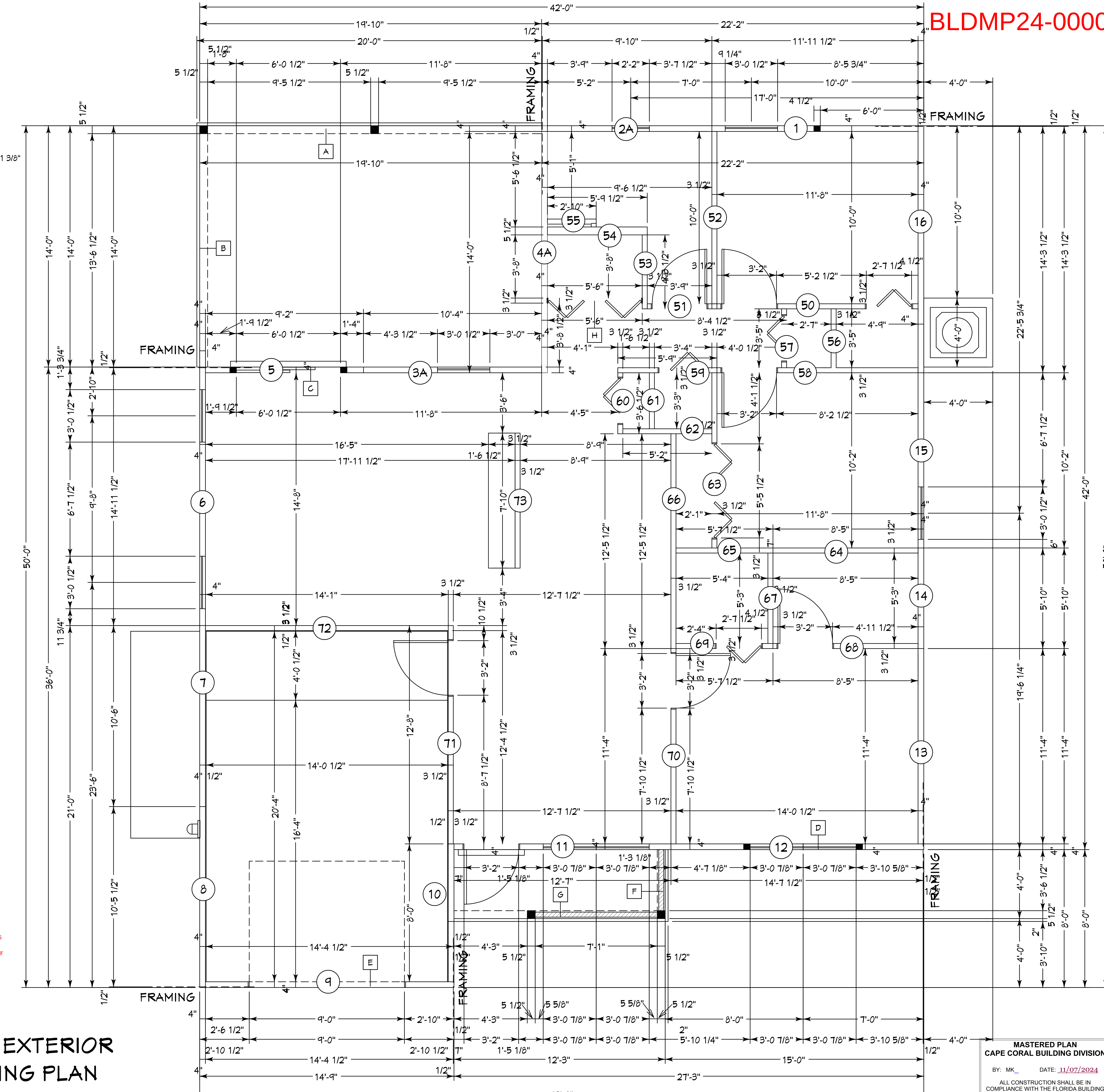


105.4.1Permit intent.
A permit issued shall be construed to be a license to proceed with the work and not as authority to violate, cancel, alter or set aside any of the provisions of the technical codes, nor shall issuance of a permit prevent the building official from thereafter requiring a correction of errors in plans, construction or violations of this code. Every permit issued shall become invalid unless the work authorized by such permit is commenced within 6 months after its issuance, or if the work authorized by such permit is suspended or abandoned for a period of 6 months after the time the work is commenced.

# INTERIOR & EXTERIOR WALL FRAMING PLAN
SCALE: N.T.S.

NOTE: EXTERIOR WOOD WALLS ARE 3 1/2" WIDE WITH 15/32" PLYWOOD (4" TOTAL) UNLESS NOTED DIFFERENT.
INTERIOR WOOD WALLS ARE 3 1/2" & 5 1/2" WIDE WOOD WALLS UNLESS NOTED DIFFERENT.

MASTERED PLAN
CAPE CORAL BUILDING DIVISION
BY: MK_ DATE: 11/07/2024
ALL CONSTRUCTION SHALL BE IN COMPLIANCE WITH THE FLORIDA BUILDING CODE, ALL STATE AND LOCAL CODES. THE GRANTING OF A PERMIT DOES NOT RELIEVE THE CONTRACTOR OF RESPONSIBILTY TO COMPLY WITH ALL CODES AND ORDINANCES.

10-05-2024 REVISIONS

CAPE PALM 1 3/2/1 MODEL / LEFT HAND GARAGE / MONO FOOTER / 2023 CODE / 10 1/2" CANT

Alfred Quattrone
Digitally signed by Alfred Quattrone
Date: 2024-10-07 16:48:12
Al Quattrone, Professional Engineer, State of Florida, License No. 52741
This item has been digitally signed and sealed by Al Quattrone, PE, on 10/7/2024.
Printed copies of this document are not considered signed and sealed and the signature must be verified on any electronic copies.

10-05-2024

Quattrone & Associates, Inc.
Engineers, Planners, & Development Consultants
4301 Veronica Shoemaker Blvd. Fort Myers, FL 33916 (239) 936-5222 QAInc.net
Certificate of Authorization Number: 9465
AL QUATTRONE P.E. # 52741

COMPLIANCE STATEMENT
THESE PLANS HAVE BEEN DESIGNED BY A REGISTERED PROFESSIONAL ENGINEER AND THE DESIGN PARAMETERS FOR THE (8TH EDITION) OF THE 2023 FLORIDA RESIDENTIAL BUILDING CODE .CHAPTER 3 IN GENERAL AND SECTION 1609 OF THE (8TH EDITION) OF THE 2023 FLORIDA BUILDING CODE.

REVISIONS:
08-08-2024
10-05-2024

HICKS DRAFTING & DESIGN
4216 5TH STREET W
LEHIGH ACRES,FL. 33971
CELL:(239)462-2734
E-MAIL:DHICKS928@AOL.COM

BUILDER: HABITAT FOR HUMANITY
3 BEDROOM 2 BATH HOME /160 MPH WIND LOADING
NEW HOUSE FOR:
LOT- /BLOCK- /UNIT- /SECTION-
TOWNSHIP- SOUTH/RANGE- EAST
STRAP#
ADDRESS:
ADDRESS:

DRAWN BY
DAVID HICKS

DATE: 03-29-2021
SCALE:1/4"=1'0"
JOB # 2024-048

SHEET
SH-1 OF SH-1 SHEET